AIPHONE®

GH SERIES

Apartment Intercom System

INSTALLATION &OPERATION MANUAL

PRECAUTIONS

General Prohibitions Prohibition to Dismantle the Unit

Prohibition on Subjecting the Unit to Water General Precautions

⚠WARNING

(Negligence could result in death or serious injury to people)

1. The unit must be installed and wired by a qualified technician.
2. Do not dismantle or alter the unit. Fire or electric shock could result.
3. Do not connect any non-specified power source to the +, - terminals, and do not install two power supplies in parallel to a single input. Fire, damage to the unit, or system malfunction could result.
4. Keep the unit away from water or any other liquid. Fire or electric shock could result.
5. Do not plug or unplug with wet hands. Electric shock could result.
6. Do not put any metal or paper into the unit through the openings. Fire or electric shock could result.
7. High voltage is present internally. Do not open the case. Electric shock could result.

⚠CAUTION

(Negligence could result in injury to people or damage to property)

1. Before turning on power, make sure wires are not crossed or shorted. Fire or electric shock could result.
2. Do not manually hold down hook switch while testing and verifying chime or call tone volume. The chime tone is very loud in earpiece,and could cause hearing damage.
3. Do not install or make any wire terminations while power supply is plugged in. It can cause electrical shock or damage to the unit.
4. Do not install the unit in a location subject to constant vibration or impact. If dropped, injury or unit damage could result.
5. When mounting the unit on wall, install the unit in a convenient location, but not where it could be jarred or bumped. Injury could result.
6. Do not alter or change wall-mounting of the unit. If dropped, it can cause injury.
7. Do not put high pressure on the video-monitor surface. If fractured, injury could result.
8. If LCD is punctured, do not allow contact with the liquid crystal inside. Inflammation could result. If necessary, gargle your mouth and clean your eyes or skin with clear water for at least 15 minutes, and consult your doctor.
9. When cleaning outer surface with high-pressure water, be sure that the entrance station will not be subjected to direct water pressure. Damage to the unit could result.
10. Do not install the unit in any of the following locations. Fire, electric shock, or unit trouble could result.
    - Places under direct sunlight, or near heating equipment that varies in temperature.
    - Places subject to dust, oil, chemicals, hydrogen sulfide (hot spring).
    - Places subject to moisture and humidity extremes, such as bathroom, cellar, greenhouse, etc.
    - Places where the temperature is quite low, such as inside a refrigerated area or in front of air-conditioner.
    - Places subject to steam or smoke (near heating or cooking surfaces).
    - Where noise generating devices such as dimmer switches, invertor electrical appliances, are closeby.
11. Do not put anything on or cover the unit with cloth, etc. Fire or unit trouble could result.
12. For DC powered systems, use Aiphone power supply model specified with system. If non-specified product is used, fire or malfunction could result.

GENERAL PRECAUTIONS

1. All the units, except for entrance station, is designed for indoor use only. Do not use outdoors.
2. The unit will be inoperative during a power outage.
3. In areas where broadcasting station antennas are close by, the intercom system may be affected by radio frequency interference.
4. Keep the intercom wires more than 30 cm (12 inches) away from AC 100-240 V lines, particularly AC lines for invertor electrical appliances. Noise and malfunction could result.
5. Keep the unit more than 1 m away from Radio or TV set.
6. When strong light comes in on the unit's screen, the image looks white or silhouetted. But this is not a unit trouble.

1 SYSTEM CONFIGURATION
Standard System Configuration ---- 4
Expanded System Configuration ---- 6
Wiring Distance ---- 7
2 COMPONENTS
Unit (Entrance Station) ---- 8
Combination Examples for Entrance Station, Unit (Bus Control Unit and Others) ---- 9
Residential Station, Security Guard Station ---- 10
3 MOUNTING
Mounting the Entrance Station (1) ---- 11
Mounting the Entrance Station (2), (3) ---- 12
Bus Control Unit and Power Supply ---- 13
Residential Station, Optional Handset ---- 14
Security Guard Station (Desk-top Mounting Using the GFW-S Stand), Security Guard Station (Wall-mounting) ---- 15
4 WIRING
Standard System ---- 16
Standard System (1) ---- 18
Standard System (2) Station-to-Station Wiring ---- 19
Standard System (3) Homerun Wiring ---- 20
Expanded System ---- 22
Option Connector ---- 25
External Signaling Relay Connection ---- 26
5 NAMES (ENTRANCE STATION)
Entrance Station (GH-VA, GH-DA/A, GH-NS, GH-10K), (GH-DA/A, GH-SW) ---- 26
6 NAMES (RESIDENTIAL STATION)
Residential Station (GH-1AD, GH-1KD) ---- 27
Residential Station (GH-1MD) ---- 27
7 NAMES (SECURITY GUARD STATION)
Security Guard Station ---- 28
8 SETTING UP (ENTRANCE STATION)
Adjusting the Camera Angle, Entering Names and Addresses,
Making Adjustements with the Mounting Gauge ---- 29
Setting up the System ---- 30
Programming (GH-NS) ---- 31
Program Mode (GH-NS) ---- 32
9 SETTING UP (SECURITY GUARD STATION)
Programming (GH-MK) ---- 34
Program Mode (GH-MK) ---- 36
10 OPERATIONS (ENTRANCE STATION)
Calling a Residential Station ---- 38
Calling the Security Guard Station, Door Release ---- 39
11 OPERATIONS (RESIDENTIAL STATION)
Replying to a Call ---- 39
Calling from the Doorbell (at Individual Door), Door Release, Turning on the Entrance Light,
Calling the Security Guard Station, Automatic Entry (Doctor Call) Option ---- 40
Emergency Alarm, Monitoring Entrance Stations, Service Button Option ---- 41
12 OPERATIONS (SECURITY GUARD STATION)
Replying to a Call from an Entrance Station, Replying to a Call from a Residential Station ---- 42
Calling an Entrance Station, Calling a Residential Station ---- 43
Calling Another Security Guard Station, Emergency Call ---- 44
Reception mode, Operation, Calling from the Doorbell, Missed call ---- 45
13 TECHNICAL PRECAUTIONS ---- 46
14 SPECIFICATIONS ---- 46

1 SYSTEM CONFIGURATION

1-1

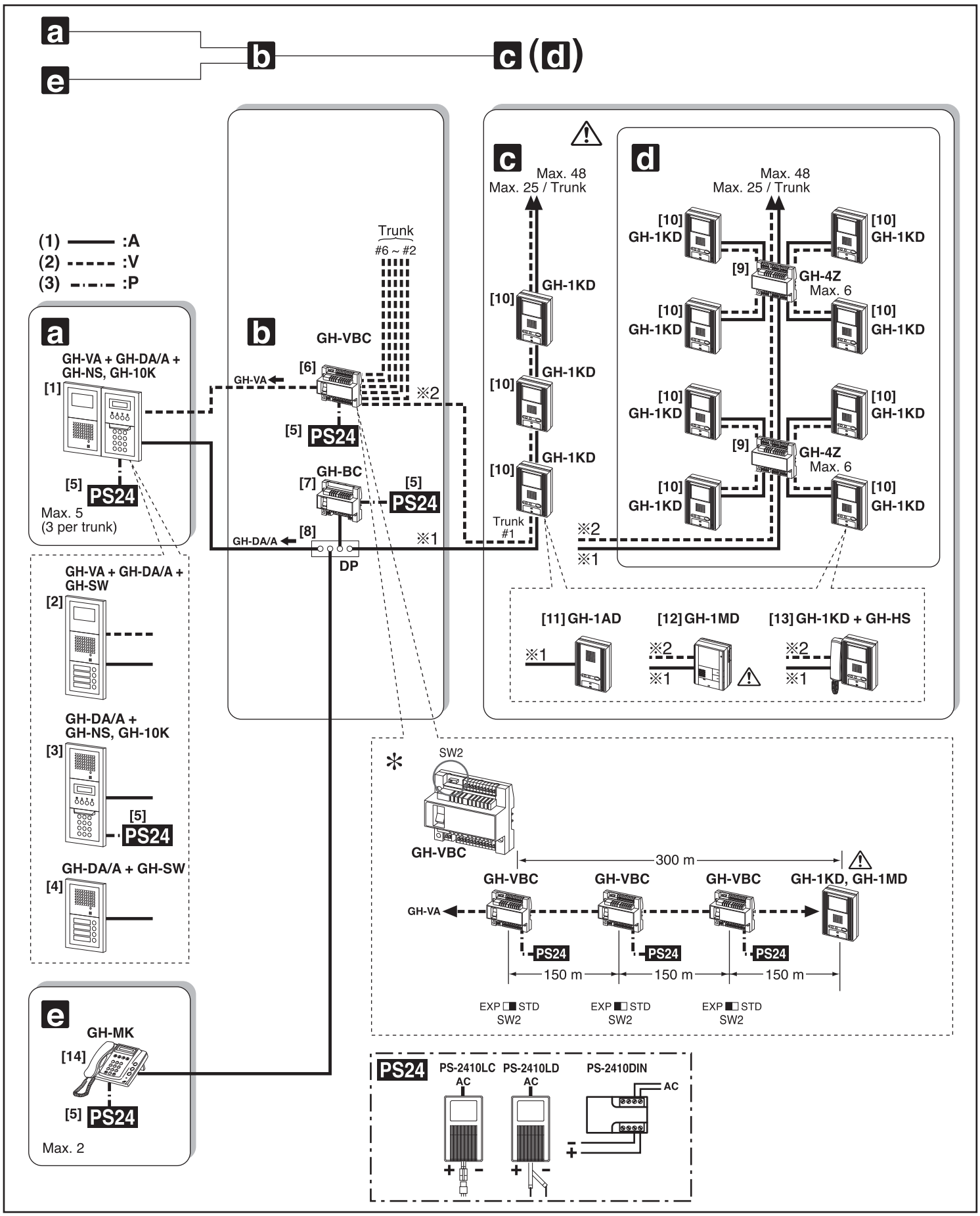

1-1

Standard System Configuration

(1) Audio signal line
(2) Video signal line
(3) Power supply line
a. Entrance station (For details, see 2-1 and 2-2)
[1] Audio/video + digital name scrolling type
GH-VA + GH-DA/A + GH-NS, GH-10K
[2] Audio/video + direct selection type
GH-VA + GH-DA/A + GH-SW
[3] Audio + digital name scrolling type
GH-DA/A + GH-NS, GH-10K
[4] Audio + direct selection type
GH-DA/A + GH-SW
b. Bus control units
[5] Power supply PS-2410LC, PS-2410LD, PS-2410DIN
[6] Video Bus control unit GH-VBC
* GH-VBC can be used as an extension adaptor as well. To do so, set the setting switch (SW2) to "EXP." (2 units per trunk line)
⚠ Even if two GH-VBC units are used as extension adaptors (SW2: EXP), the wiring distance from the video Bus control unit (SW2: STD) to the farthest video residential station is limited to 300 m (980').
[7] Bus control unit GH-BC
[8] Distribution terminal (junction): sold separately
c. Residential station (For details, see 2-4): Station-to-station wiring
d. Residential station (For details, see 2-4): Homerun wiring
⚠ Do not mix station-to-station wiring and homerun wiring on a single trunk line.
[9] 4-way video junction unit GH-4Z
[10] Color video residential station GH-1KD, GH-1KD-SW
(Supplied with working service button)
[11] Audio residential station GH-1AD, GH-1AD-SW
(Supplied with working service button)
[12] Black &White video residential station GH-1MD
⚠ Station-to-station wiring is not possible for GH-1MD
[13] Color video residential station + handset (option) GH-1KD + GH-HS, GH-1KD-SW + GH-HS
e. Security Guard Station
[14] Security guard station GH-MK

	Capacity
Entrance Station	Maximum 5 stations (up to 3 stations per trunk)
Residential Station	Maximum 48 stations (up to 25 stations per trunk)
Security Guard Station	Maximum 2 stations
Residential stations in the same residence	Maximum 4 stations (up to 2 monitor stations)
4-way video junction unit	Maximum 6 units per trunk
Bus control unit	Maximum 1 unit per system

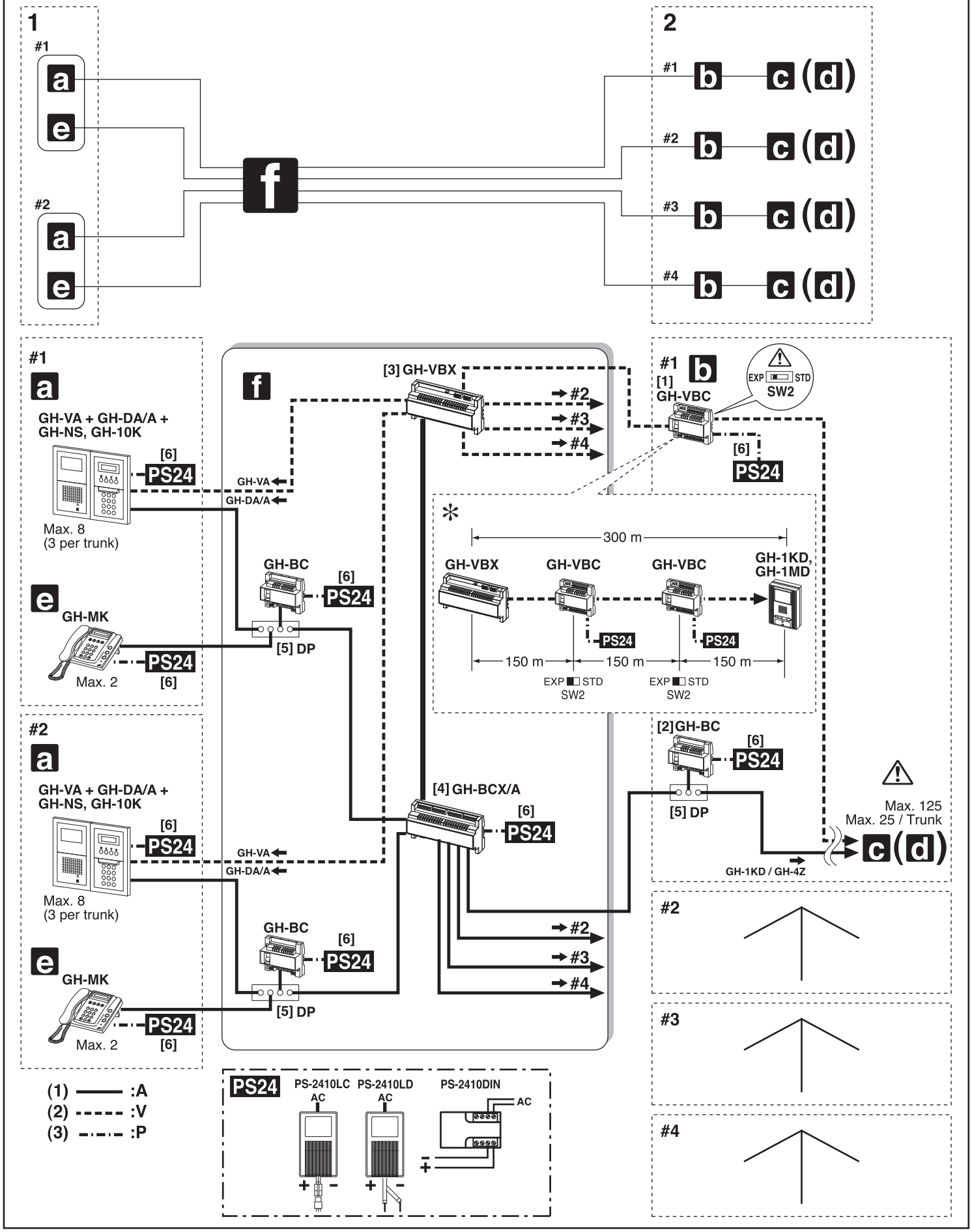
1
#1
a
e
#2
a
e
f
2
#1 b c (d)
#2 b c (d)
#3 b c (d)
#4 b c (d)
#1
a
GH-VA + GH-DA/A +
GH-NS, GH-10K
[6]
PS24
Max. 8
(3 per trunk)
e
GH-MK
PS24
Max. 2
[6]
GH-BC
[6]
PS24
[5] DP
GH-VA
GH-DA/A
[3] GH-VBX
#2
#3
#4
[4] GH-BCX/A
[6]
PS24
#2
a
GH-VA + GH-DA/A +
GH-NS, GH-10K
[6]
PS24
Max. 8
(3 per trunk)
e
GH-MK
PS24
Max. 2
[6]
GH-BC
[6]
PS24
[5] DP
GH-VA
GH-DA/A
#2
#3
#4
f
#1 b
[1]
GH-VBC
EXP STD
SW2
[6]
PS24
*
300 m
GH-VBX
GH-VBC
GH-VBC
GH-1KD,
GH-1MD
PS24
PS24
150 m
150 m
150 m
EXP STD
SW2
EXP STD
SW2
[2] GH-BC
[6]
PS24
[5] DP
Max. 125
Max. 25 / Trunk
c (d)
GH-1KD / GH-4Z
#2
#3
#4
(1) :A
(2) :V
(3) :P
PS24
PS-2410LC
AC
PS-2410LD
AC
PS-2410DIN
AC

1-2

Expanded System Configuration Diagram

1. Common trunk line #1, 2
2. Sub trunk line #1 - 4
   Sub trunk line #2 - #4 are the same as #1. Maximum 125 units per sub trunk line.
   (1) Audio signal line
   (2) Video signal line
   (3) Power supply line

a. Entrance station (For details, see 2-1 and 2-2)
b. Bus control unit
[1] Video Bus control unit GH-VBC
⚠ In Expanded System, GH-VBC unit is used as extension adaptor (SW2: EXP).
* Another GH-VBC can be added as the second extension adaptor (SW2: EXP). The wiring distance from the Expanded video Bus control unit GH-VBX to the farthest video residential station is limited to 300 m (980').
[2] Bus control unit GH-BC
c. Residential station (For details, see 2-4):
Station-to-station wiring (For details, see 1-1)
d. Residential station (For details, see 2-4):
Homerun wiring (For details, see 1-1)
⚠ Do not mix station-to-station wiring and homerun wiring on a single trunk line.
e. Security Guard Station
f. Expanded Bus control unit
[3] Expanded video Bus control unit GH-VBX
[4] Expanded Bus control unit GH-BCX/A
[5] Distribution terminal (junction): Not included
[6] Power supply PS-2410LC, PS-2410LD, PS-2410DIN

	Capacity
Entrance Station	Maximum 16 stations (up to 3 stations per trunk)
Residential stations per Sub trunk line	Maximum 125 stations (up to 25 stations per trunk)
Residential Station	Maximum 500 stations
Security Guard Station	Maximum 4 stations
Residential stations in the same residence	Maximum 4 stations (up to 2 monitor stations)
Bus control unit per Common trunk line	Maximum 1 unit
Bus control unit per Sub trunk line	Maximum 1 unit

1-3

Wiring Distance

* DP = Distribution Point

Diameter of wires	0.65 mm (22 AWG)	0.8 mm (20 AWG)	1.0 mm (18 AWG)
GH-BC - DP	-	5 m (16')	-
DP - GH-DA/A	-	300 m (980')	-
GH-VBC - GH-VA	150 m (490')	300 m (980')	-
GH-MK - DP	-	300 m (980')	-
DP - farthest residential station (R1-R2) (Includes system with GH-4Z)	-	300 m (980')	-
GH-VBC - farthest residential station (1 monitor unit/residence) (Includes system with GH-4Z)	100 m (330')	150 m (500')	-
GH-VBC - farthest residential station (2 monitor units/residence) (Includes system with GH-4Z)	50 m (165')	100 m (330')	150 m (500')
GH-VBC (SW2: STD) - GH-VBC (SW2: EXP)	100 m (330')	150 m (500')	-
GH-BC - power supply	-	5 m (16')	5 m (16')
GH-VBC - power supply	-	5 m (16')	5 m (16')
GH-NS - power supply	-	300 m (980')	300 m (980')
GH-MK - power supply	-	300 m (980')	300 m (980')
Standard system total wiring distance	-	2500 m (8200')	-
GH-BCX/A - power supply	-	5 m (16')	5 m (16')
GH-BC - GH-BCX/A	-	300 m (980')	-
GH-VBC (SW2: EXP) - GH-VBX	-	150 m (500')	-
GH-DA/A - GH-BCX/A	-	300 m (980')	-
GH-VA - GH-VBX	150 m (500')	300 m (980')	-
GH-BCX/A - farthest residential station (R1-R2) (Includes system with GH-4Z)	-	300 m (980')	-
GH-VBX - farthest residential station (1 monitor unit/residence) (Includes system with GH-4Z)	100 m (330')	150 m (500')	-
GH-VBX - farthest residential station (2 monitor units/residence) (Includes system with GH-4Z)	50 m (165')	100 m (330')	150 m (500')
Expanded system total per Common trunk line (maximum 2 trunk lines)	-	each 2500 m (8200')	-
Expanded system total per Sub trunk line (maximum 4 trunk lines)	-	each 2500 m (8200')	-

2 COMPONENTS

2-1

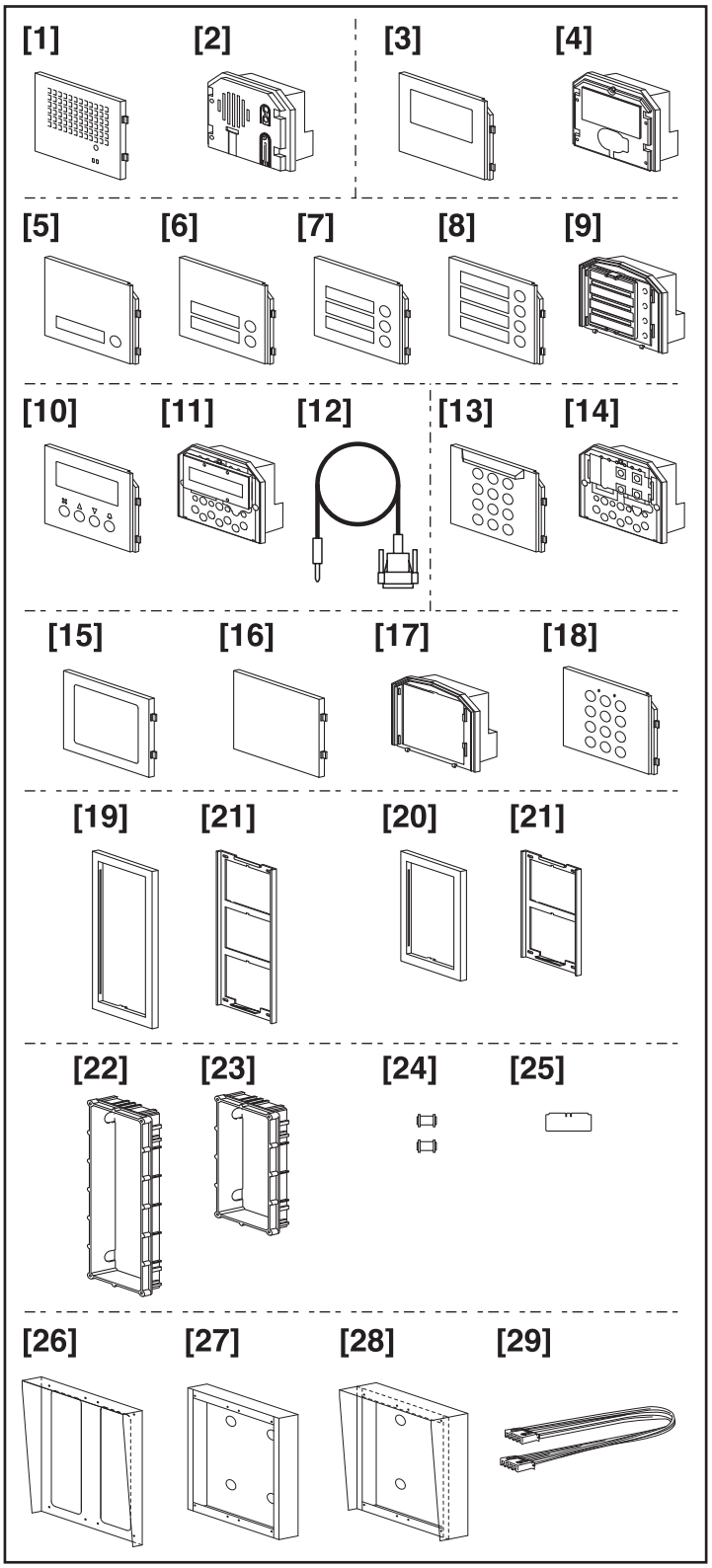

Unit (Entrance Station)

[1] Speech module panel GH-DP
[2] Speech module GH-DA/A
[3] Camera module panel GF-VP
[4] Camera module GH-VA
[5] 1-call button panel GF-1P
[6] 2-call button panel GF-2P
[7] 3-call button panel GF-3P
[8] 4-call button panel GF-4P
[9] Call switch module GH-SW
[10] Digital name scroll module panel GF-NSP
[11] Digital name scroll module GH-NS
[12] RS-232C cable (included with GH-NS)
[13] Digital keypad module panel GF-10KP
[14] Digital keypad module GH-10K
[15] Address module panel GF-AP
[16] Blank panel GF-BP
[17] Address module GH-AD
[18] Access control keypad module GF-AC
[19] 3-module front frame GF-3F
[20] 2-module front frame GF-2F
[21] Mounting bracket (included with GF-3F and GF-2F)
[22] 3-module back box GF-3B
[23] 2-module back box GF-2B
[24] Joint pipe (included with GF-3B and GF-2B)
[25] Mounting gauge (included with GF-3B and GF-2B)
[26] Rain hood GF-203HA (option)
[27] Surface-mount box GF-203BA (option)
[28] Hooded surface-mount box GF-203HA (option)
[29] 80 cm (32") connection cable GF-C (option)

2-2

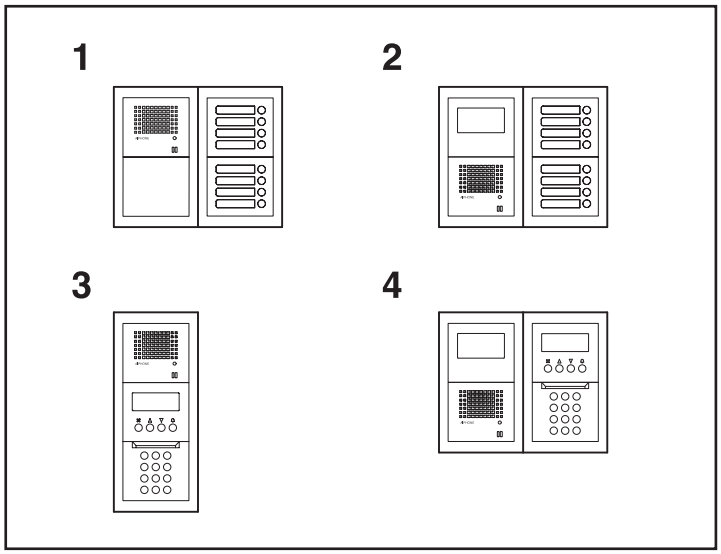

Combination Examples for Entrance Station

1. Audio only. Direct selection (8 stations).
2. Audio/video. Direct selection (8 stations).
3. Audio only. Digital name scrolling.
4. Audio/video. Digital name scrolling.

2-3

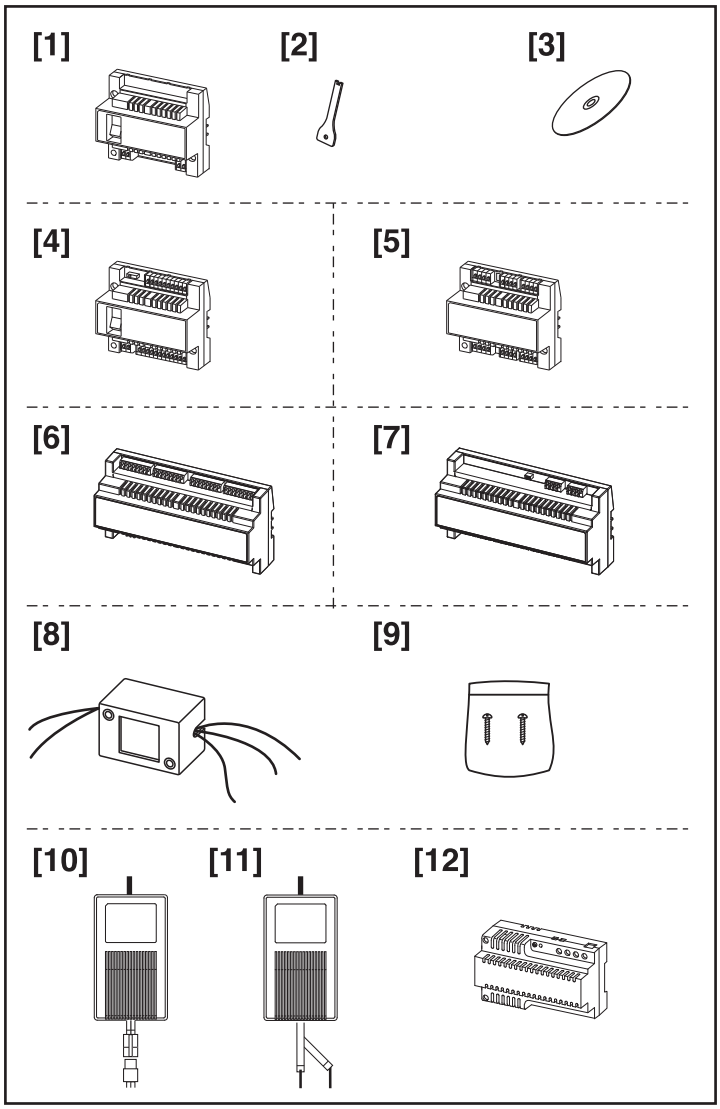

Unit (Bus Control Unit and Others)

[1] Bus control unit GH-BC (mounting bracket is not included)
[2] Special screwdriver (included with GH-BC)
[3] CD (contains operation manual and setup tool) (included with GH-BC)
[4] Video Bus control unit GH-VBC (mounting bracket is not included)
[5] 4-way video junction unit GH-4Z (mounting bracket is not included)
[6] Expanded Bus control unit GH-BCX/A (mounting bracket is included)
[7] Expanded video Bus control unit GH-VBX (mounting bracket is included)
[8] External signaling relay GH-RY
[9] Mounting screws (included with GH-RY)
[10] Power supply PS-2410LC
[11] Power supply PS-2410LD
[12] Power supply PS-2410DIN

2-4

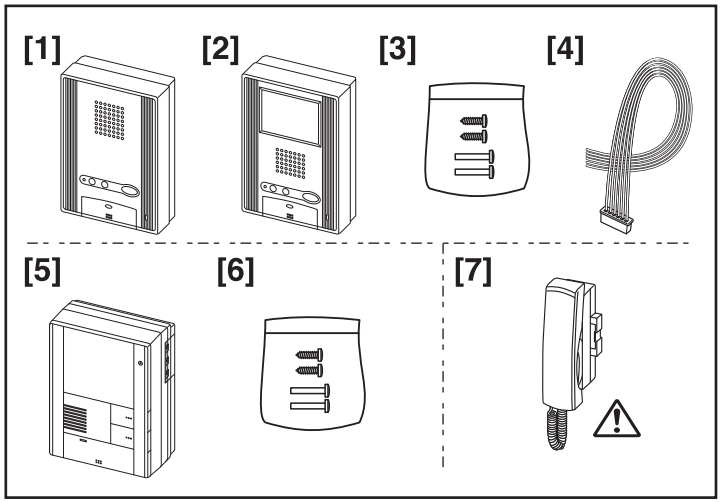

Residential Station

[1] Audio residential station GH-1AD, GH-1AD-SW (Supplied with working service button)
[2] Color video residential station GH-1KD, GH-1KD-SW (Supplied with working service button)
[3] Mounting screws (enclosed with GH-1AD and GH-1KD)
[4] Option connector (enclosed with GH-1AD-SW and GH-1KD-SW)
[5] Black-and-white monitor residential station GH-1MD
[6] Mounting screws (enclosed with GH-1MD)
[7] Optional handset GH-HS (mounting screws are attached back side)

⚠ GH-HS can be installed only for the color monitor residential station GH-1KD,GH-1KD-SW.

2-5

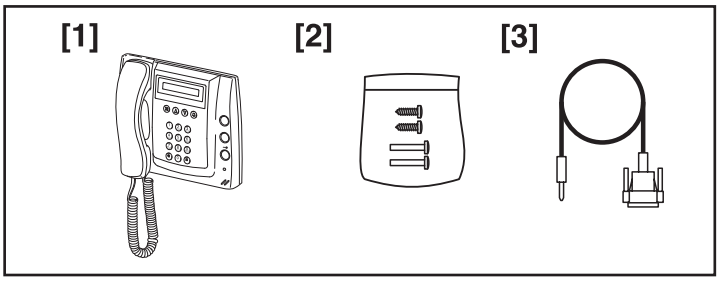

Security Guard Station

[1] Security guard station GH-MK
[2] Mounting screws (enclosed with GH-MK)
[3] RS-232C cable (enclosed with GH-MK)

3 MOUNTING

3-1

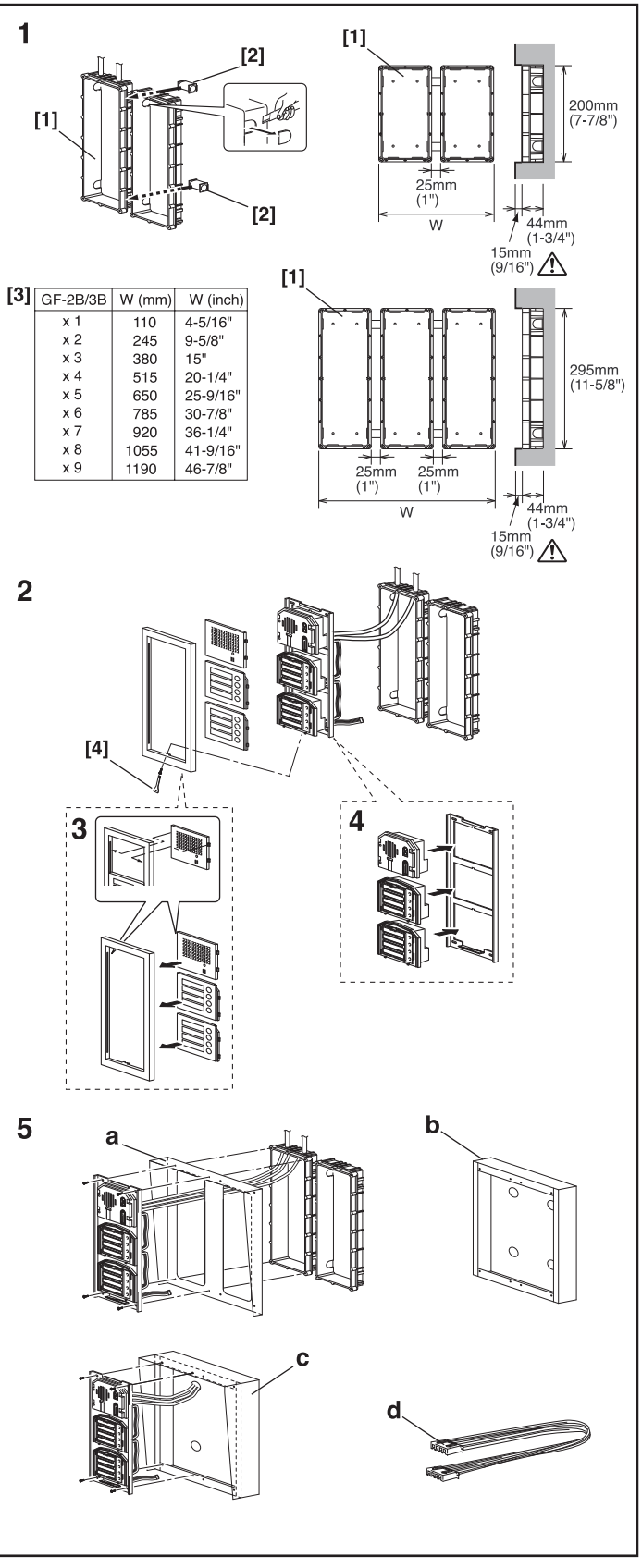

Mounting the Entrance Station (1)

[1] Back box
[2] Joint pipe
[3] Back box assembly dimensions
[4] Special screwdriver (enclosed with GH-BC)

1. Mounting the back box
- Make a hole for the cable.
- Use the joint pipe to assemble the back box.
- Make sure the back box is mounted level.
- Mount the camera and GH-NS module at eye-level for the average height of an adult.

⚠Do not mount the back box on a surface that is recessed by 15 mm (1/2") or more from the external surface of the wall.

2. Set up the modules.
- For information on what modules can be used, see 2-1 and 2-2.

⚠Up to 6 GH-SW modules can be used. If you would like to connect 7 modules or more, please contact Aiphone.

3. Mount each module panel to the front frame.
- Mount the panels from behind the front frame.
- Insert the notch into the slots on both sides and slide it downward.

4. Mount each module, except GF-AC, to the mounting bracket.
- Set the modules in the mounting bracket until they click in place.

5. Options
a. Rain hood GF-203HA
b. Surface-mount box GF-203BA
c. Hooded surface-mount box GF-203HBA
d. 80 cm (32") connection cable GF-C

⚠Peel off protection film on GH-NS display.

3-2

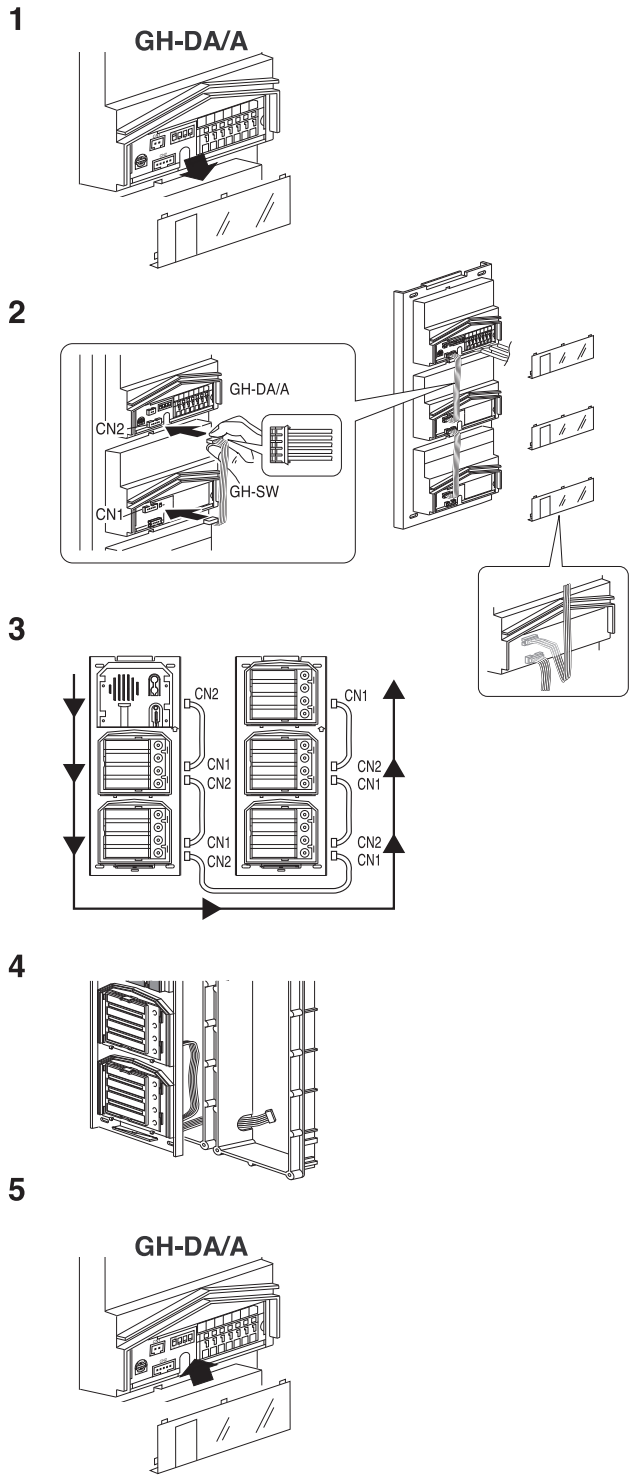

Mounting the Entrance Station (2)

1. Remove the terminal cover.
2. From the speech module to the next module, insert the attached connector into the socket. Make sure to run the cable under the terminal cover for protection.
3. Connect the connectors between the modules with cables.
4. Run the connection cable through the joint pipe (which you should have made open in advance) and connect CN1 of GH-SW to the next row.
5. Put back the terminal cover.

3-3

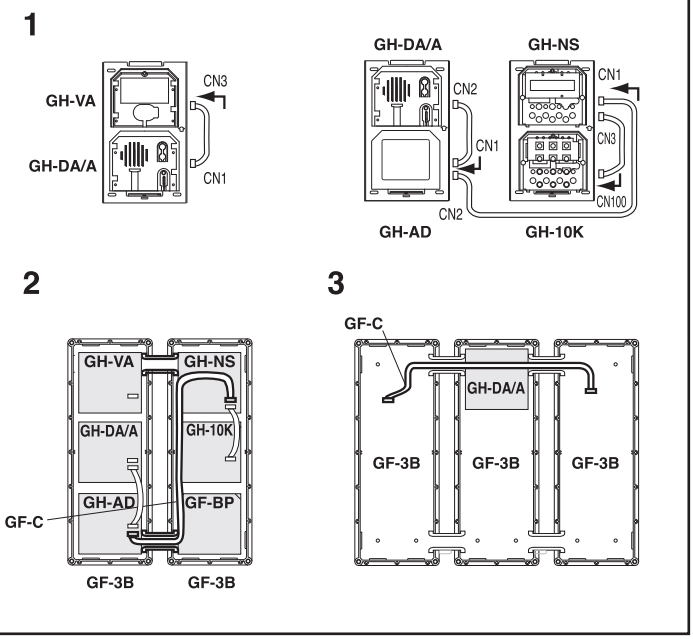

Mounting the Entrance Station (3)

1. Example of interconnection of modules.
2. Use GF-C to connect to the name scrolling module.
3. To position the speech module in the center row, run GF-C through the joint pipe in advance.

3-4

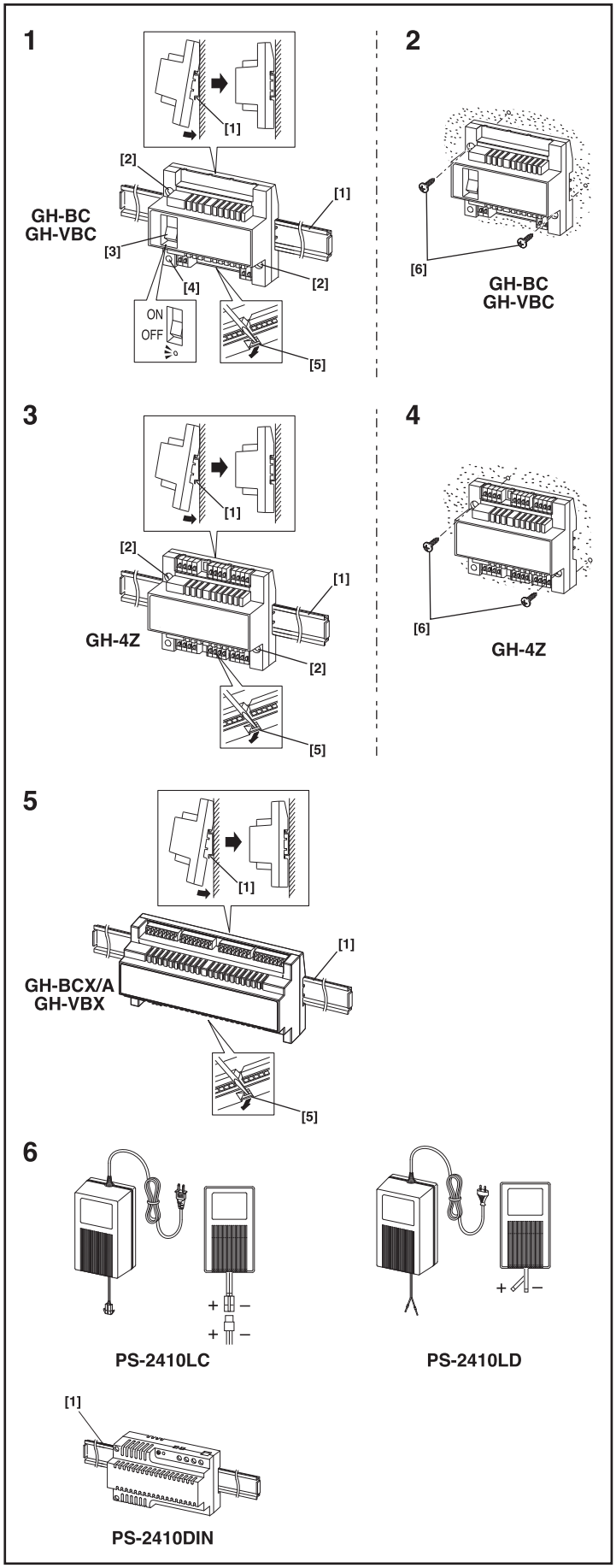

Bus Control Unit and Power Supply

[1] Din rail (W-DIN11)
[2] Screw hole
[3] POWER switch
[4] Power On LED (green)
[5] Lock release lever
[6] Wall mounting screws (x2)

1. Mount GH-BC and GH-VBC to the Din rail. Click unit into place.
   * To remove GH-BC and GH-VBC, pull the lock release lever down.
   * If there is a problem with the system, check the power supply wiring. Turn off the GH-BC and GH-VBC power switch and then turn the switch back on after four seconds. This will reset the entire system.
2. Mount GH-BC and GH-VBC directly to the wall surface.
3. Mount GH-4Z to the Din rail.
   * To remove GH-4Z, pull the lock release lever down.
4. Mount GH-4Z directly to the wall surface.
5. Mount GH-BCX/A and GH-VBX to the Din rail. To remove GH-BCX/A and GH-VBX, pull the lock release lever down.
   ⚠1. GH-BCX/A and GH-VBX cannot be mounted directly to the wall surface.
   ⚠2. The length of the connecting cable between the GH-BCX/A and GH-VBX is 40 cm (15-3/4"). Therefore, mount the GH-BCX/A and GH-VBX adjacent to each other.
6. Power supply PS-2410LC, PS-2410LD, PS-2410DIN
   Red: +
   Black: -

3-5

GH-1AD
GH-1KD

1

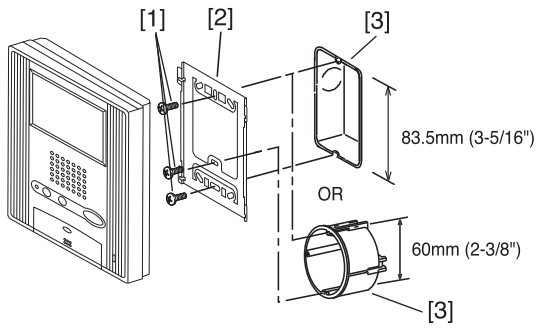

2

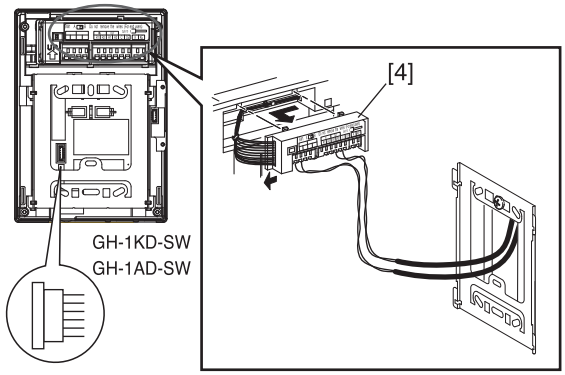

3

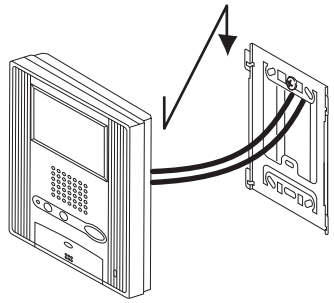

GH-1MD

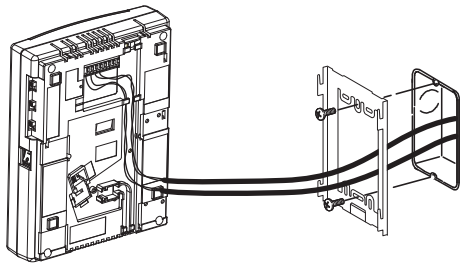

Residential Station

[1] Mounting screws (x2)
[2] Mounting bracket
[3] 1-gang box or round back box
[4] Terminal block (GH-1AD, GH-1KD)

1. Mount the mounting bracket on the 1-gang box.
2. Connect the wiring to the terminal block.
3. Mount the station unit to the mounting bracket.

⚠ Strip away the jacket of the cable and insert all wires into the slots in an orderly fashion. Failure to do so could result in pinching that may damage the wiring.

NOTE: To remove the terminal block, slide the terminal block and pull it out. (GH-1AD, GH-1KD)

3-6

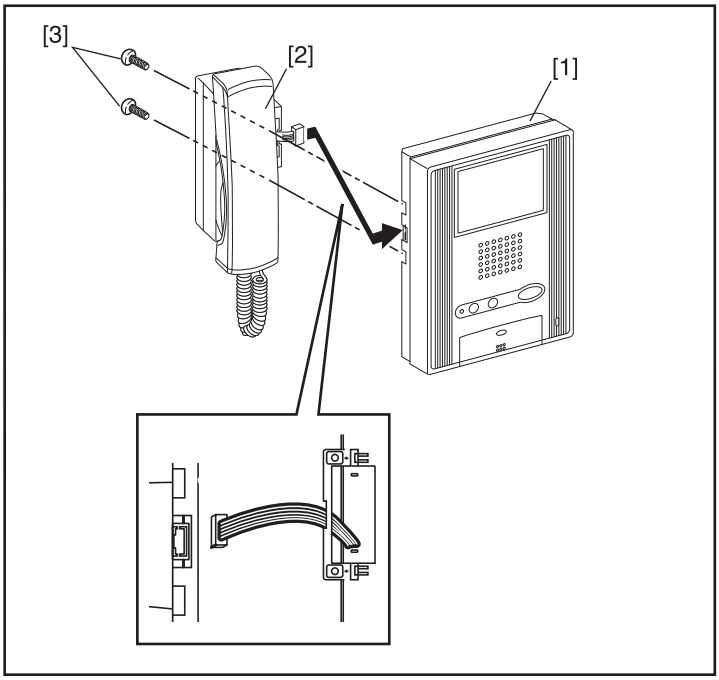

Optional Handset

[1] Chassis
[2] Handset (GH-HS)
[3] Screws (x2)

- Connect the station unit joint connector.

⚠ GH-HS can be installed only for the color monitor residential station (GH-1KD, GH-1KD-SW).

3-7

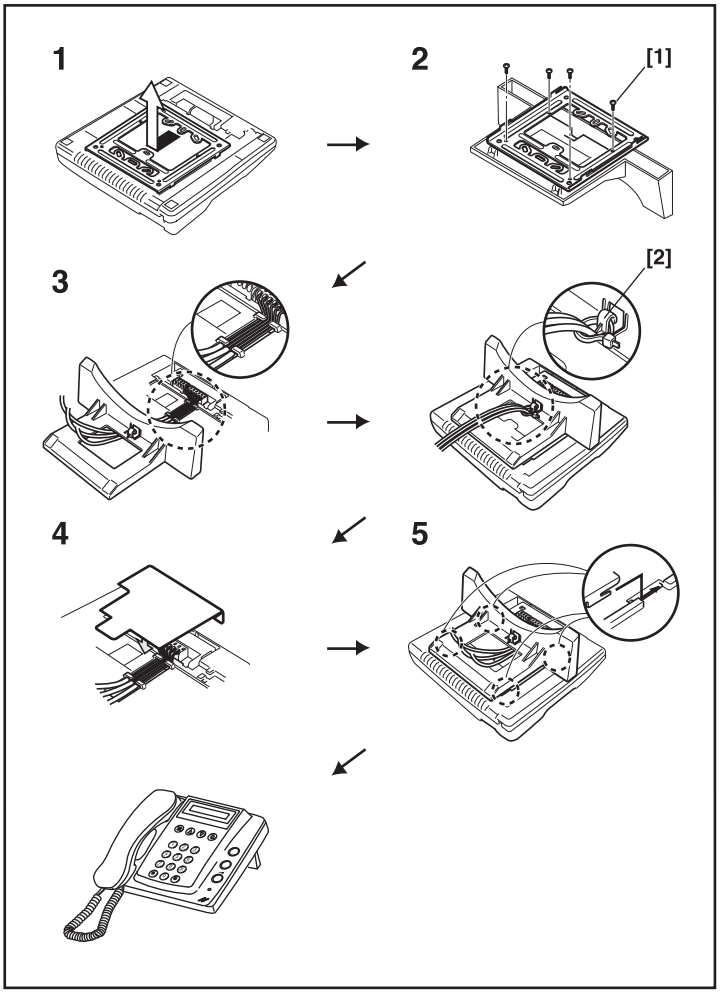

Security Guard Station (Desk-top Mounting Using GFW-S Stand)

[1] Screws included with GFW-S (x4)
[2] Cable tie included with GFW-S

1. Separate the mounting bracket and the protective cover from the back of the unit.
2. Mount the mounting bracket to GFW-S as shown in the drawing.
3. Connect the wiring to the terminal block, inserting the wires into the slots in an orderly fashion.
   ⚠ Set the wiring in place with the cable tie to ensure that they are not pulled out.
4. Cover the terminal section with the protective cover.
5. Insert the mounting bracket latch and slide it upward until it locks.

3-8

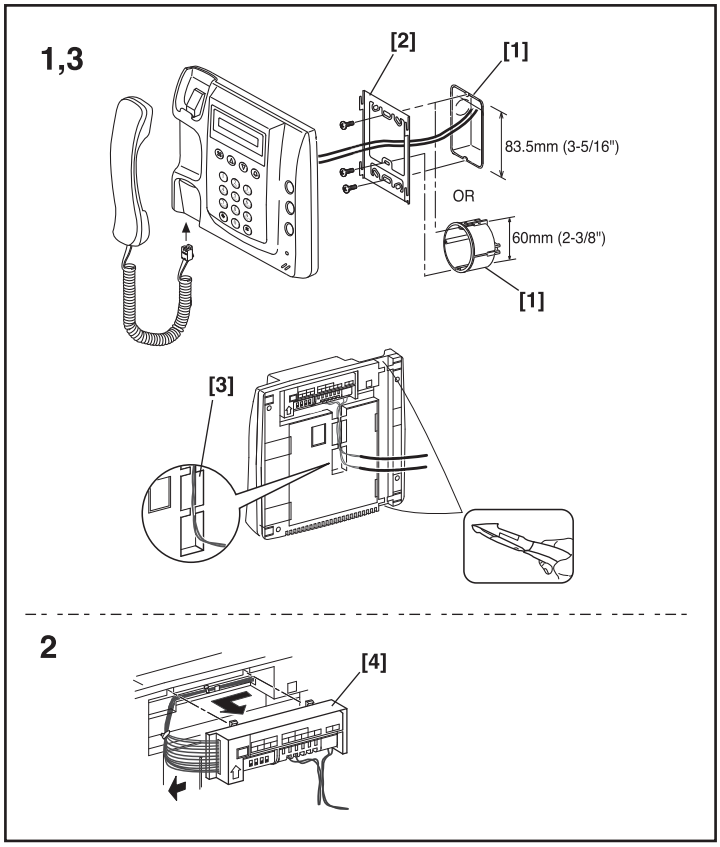

Security Guard Station (Wall-mounting)

[1] 1-gang box or round back box
[2] Mounting bracket
[3] Wiring slot
[4] Terminal block

1. Mount the mounting bracket on the 1-gang box.
2. Connect the wiring to the terminal block.
3. Mount the station unit to the mounting bracket.
   ⚠ Strip away the jacket of the cable and insert all wires into the slots in an orderly fashion. Failure to do so could result in pinching that may damage the wiring.

NOTES: 1. To remove the terminal block, slide it to the left and pull it out.
2. To wire along the main unit surface, use a nipper to cut the section shown on the drawing.

⚠ Peel off protection film on display.

4 WIRING

Standard system

Capacity
5 Entrance stations
2 Security guard stations
48 Residential stations

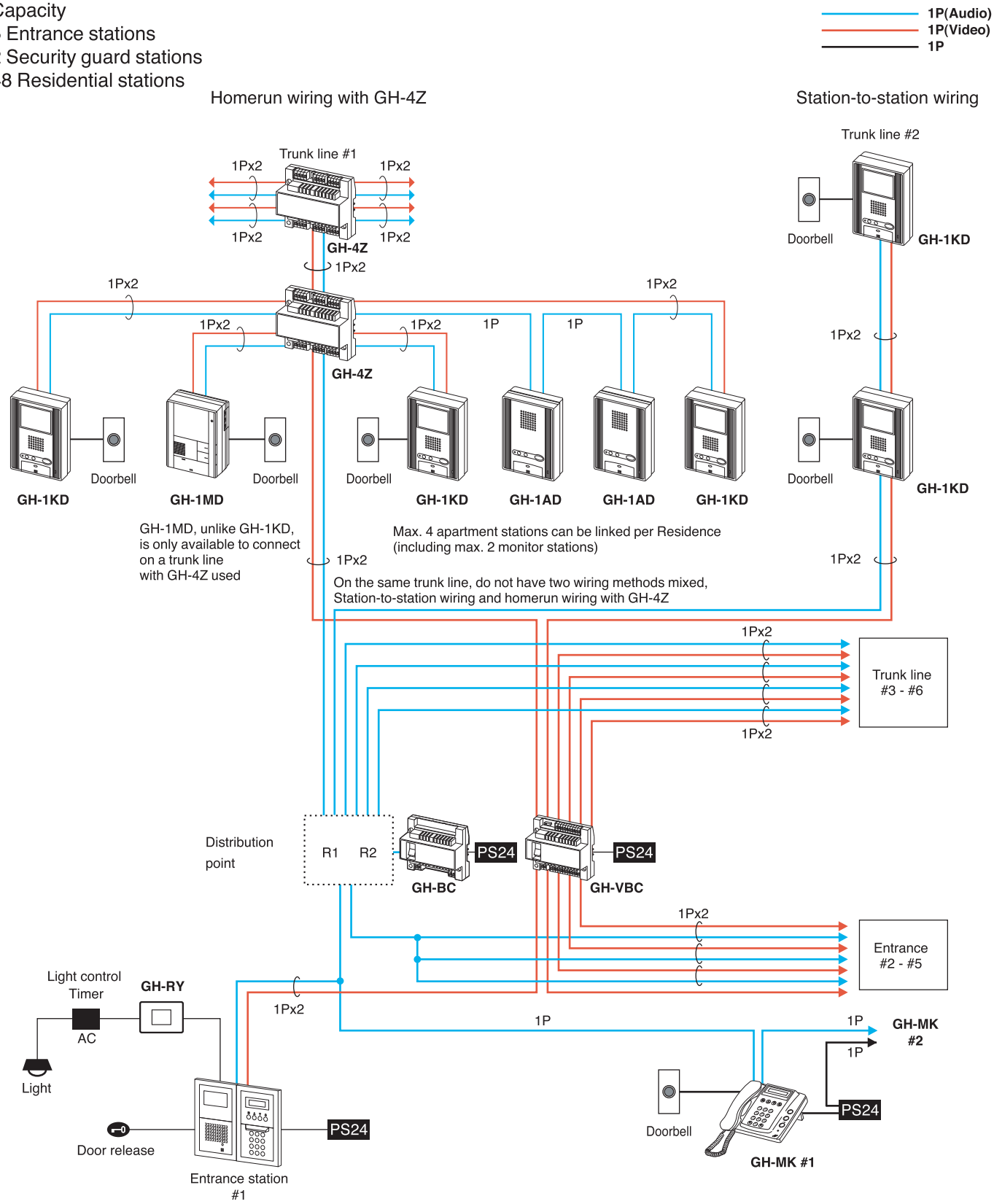

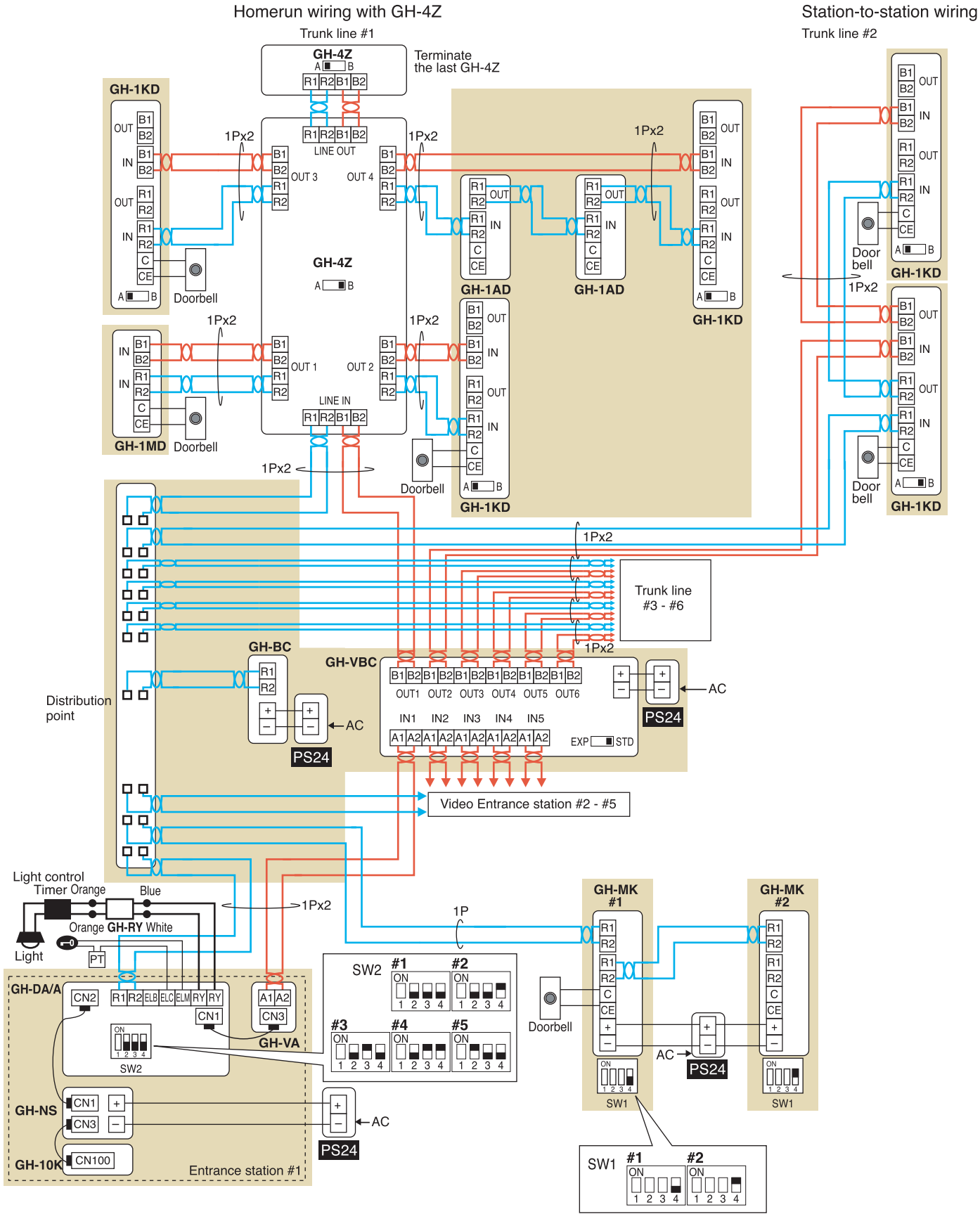
Homerun wiring with GH-4Z
Station-to-station wiring
Trunk line #1
Trunk line #2
GH-4Z
Terminate the last GH-4Z
GH-1KD
GH-1AD
GH-1MD
Doorbell
Door bell
1Px2
LINE OUT
LINE IN
OUT 1
OUT 2
OUT 3
OUT 4
Trunk line #3 - #6
Distribution point
GH-BC
GH-VBC
PS24
AC
Video Entrance station #2 - #5
Light control
Timer Orange
Blue
Orange GH-RY White
Light
PT
1P
GH-MK #1
GH-MK #2
GH-DA/A
GH-VA
GH-NS
GH-10K
CN100
Entrance station #1
SW1
SW2

4-1

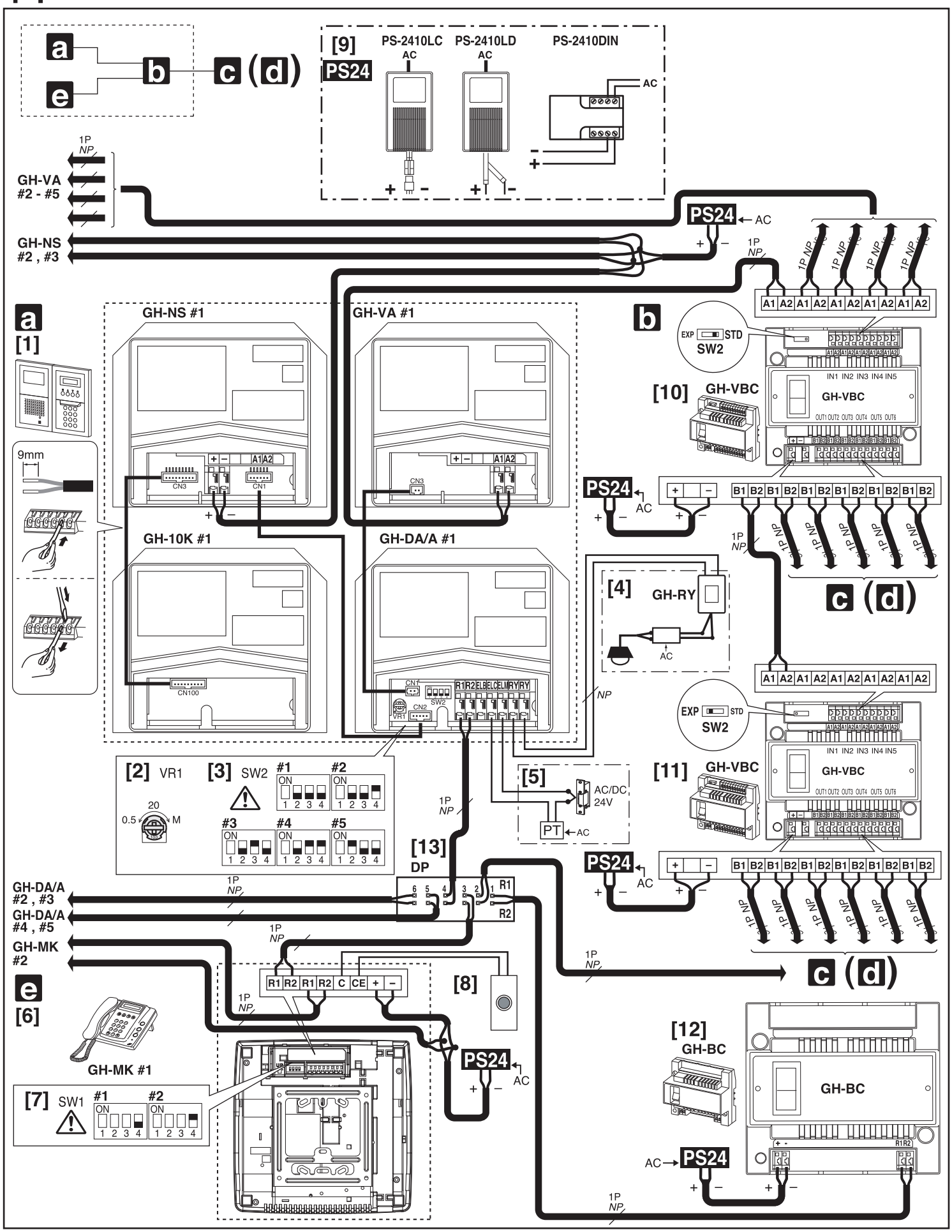
a
b
c (d)
e
[9]
PS24
PS-2410LC
PS-2410LD
PS-2410DIN
AC
1P NP
GH-VA #2 - #5
GH-NS #2 , #3
PS24
AC
GH-NS #1
GH-VA #1
GH-10K #1
GH-DA/A #1
[1]
9mm
CN3
CN1
CN100
CN4
CN2
SW2
VR1
R1 R2 EL BEL CEL MRY RY
[2] VR1
[3] SW2
[4] GH-RY
[5]
AC/DC 24V
PT
[10] GH-VBC
[11] GH-VBC
EXP STD
SW2
IN1 IN2 IN3 IN4 IN5
OUT1 OUT2 OUT3 OUT4 OUT5 OUT6
[13] DP
GH-DA/A #2 , #3
GH-DA/A #4 , #5
GH-MK #2
R1 R2 R1 R2 C CE + –
[6]
GH-MK #1
[7] SW1
[8]
[12] GH-BC
GH-BC
NP

4-2

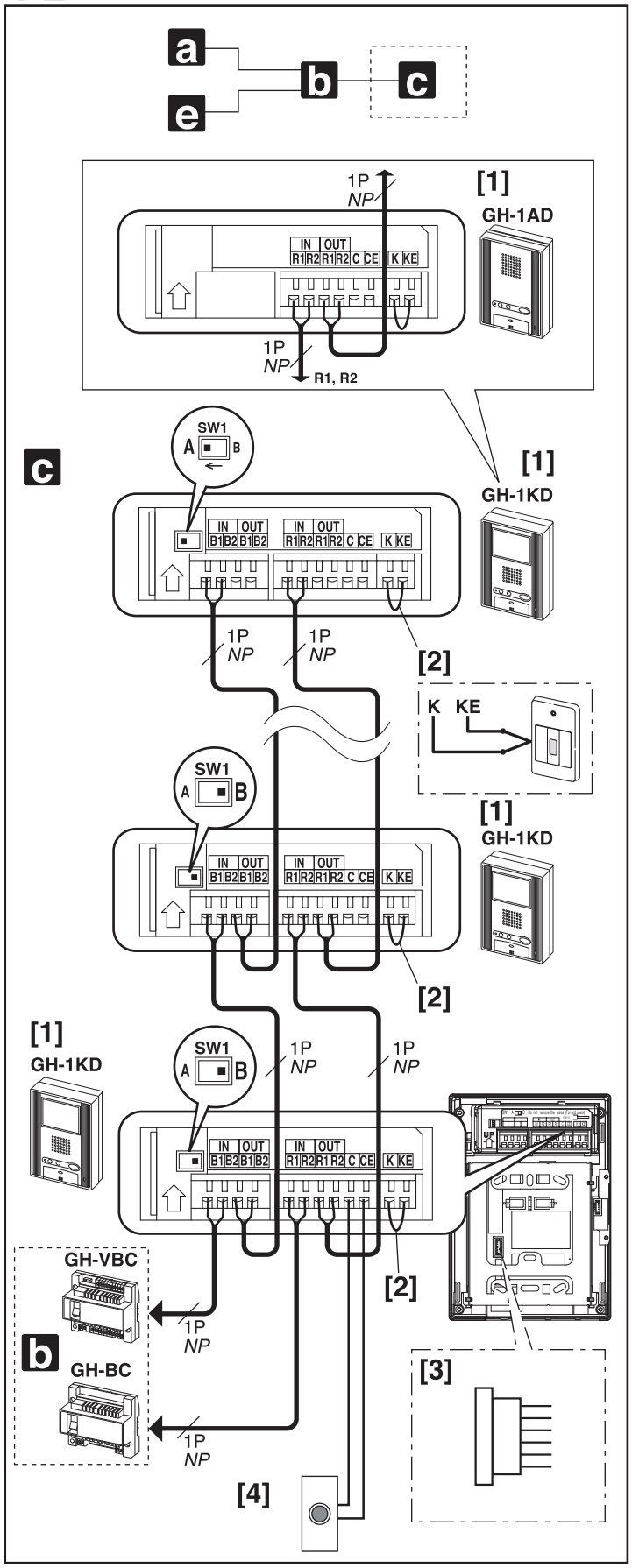

4-1

Standard System (1)

[1] Entrance Station

[2] Door release timer (set to "M" at time of shipment)

- Set the duration for the door release function when the door release button is pressed.
  [0.5] - [20]: 0.5 secs - 20 secs
  [20] - [M]: Activates while the button is pressed.

[3] Setting switch (GH-DA/A)

- SW2: 1: Setting switch for camera entrance station monitoring function (set to OFF at time of shipment)
  ON (Up): Monitored.
  OFF (Down): Skipped at time of entrance station monitoring.
- SW2: 2 - 4: Entrance station number setting switch (set to #1 at time of shipment)

⚠When installing multiple entrance stations, make sure to set the GH-DA/A ID numbers (SW2).

[4] External signaling relay GH-RY
For details, see 4-5.

[5] Door release relay contact
Less than AC/DC 24 V, 4 A (resistance load)
PT: AC Transformer
For connecting the access control keypad module GF-AC, refer to the GF-AC Installation & Operation Manual.

[6] Security guard station GH-MK

[7] Setting switch (GH-MK)

- SW1: 1: Password reset switch
  Set the password reset switch to ON for 2 seconds or more during standby will reset the password (set to "*1111" at time of shipment).
- SW1: 2, 3: Unused switch
- SW1: 4: Security guard station number setting switch (set to #1 at time of shipment)

⚠When installing two security guard stations, make sure to set the ID numbers (SW1).

[8] Doorbell button

[9] Power supply PS-2410LC, PS-2410LD, PS-2410DIN

[10] Video Bus control unit GH-VBC (SW2: STD)

[11] Video Bus control unit GH-VBC (SW2: EXP)

- To use GH-VBC as an extension adaptor, set the setting switch to "EXP". Connect only "IN1" terminal at input side.

[12] Bus control unit GH-BC

[13] Distribution terminal (junction): Not included

NP: Non-polarized

4-2

Standard System (2) Station-to-Station Wiring

[1] Residential station GH-1KD, GH-1AD

- There can be a maximum of 25 stations per trunk.
- For the terminating residential station GH-1KD, set the setting switch (SW1) to "A".

[2] Short lead

- To use the emergency alarm switch (see 11-7 for details), disconnect the short lead and connect the switch.

[3] Option Connector
For details, see 4-6.

⚠The separate option connecter is required.

[4] Doorbell button

⚠1. Do not mix station-to-station wiring with homerun wiring.

⚠2. Station-to-station wiring is not possible for GH-1MD.

NP: Non-polarized

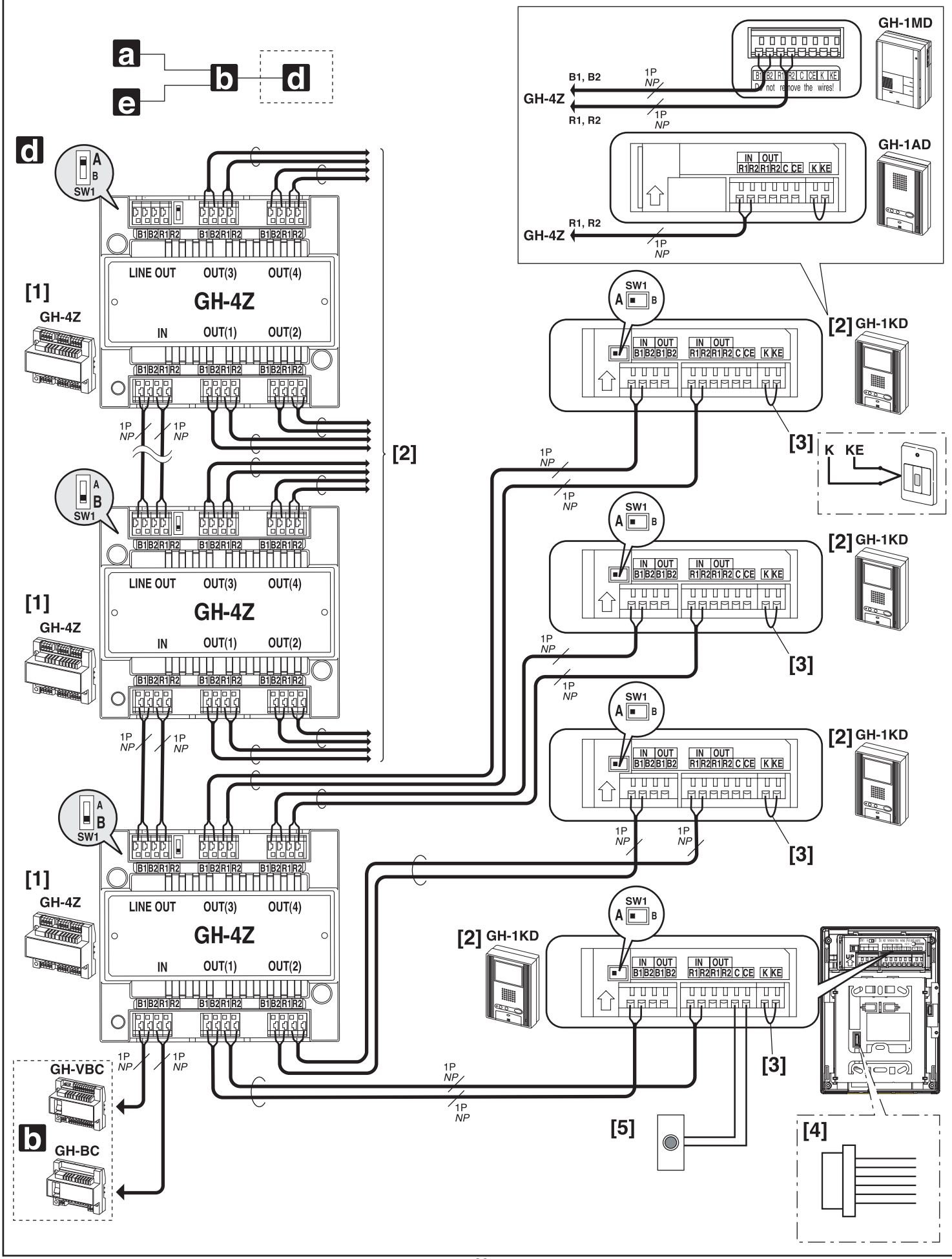
a
e
b
d
GH-1MD
B1, B2
1P NP
GH-4Z
R1, R2
1P NP
Do not remove the wires!
GH-1AD
IN OUT
R1 R2 R1 R2 C CE K KE
[2] GH-1KD
[3]
K KE
[1]
GH-4Z
SW1
A B
LINE OUT OUT(3) OUT(4)
GH-4Z
IN OUT(1) OUT(2)
B1 B2 R1 R2
[5]
[4]
GH-VBC
GH-BC

4-3

Standard System (3) Homerun Wiring

[1] 4-way video junction unit GH-4Z

- For the terminating GH-4Z (maximum of 6 units per trunk), set the setting switch (SW1) to "A".

[2] Residential station GH-1KD, GH-1AD, GH-1MD

- For GH-1KD, set the setting switch (SW1) to "A".

[3] Short lead

- To use the emergency alarm switch (see 11-7 for details), disconnect the short lead and connect the switch.

[4] Option Connector
For details, see 4-6.
⚠ The separate option connecter is required.

[5] Doorbell
⚠ Do not mix homerun wiring with station-to-station wiring on the same trunk line.

NP: Non-polarized

Expanded system

Capacity
16 Entrance stations
4 Security guard stations
500 Residential stations

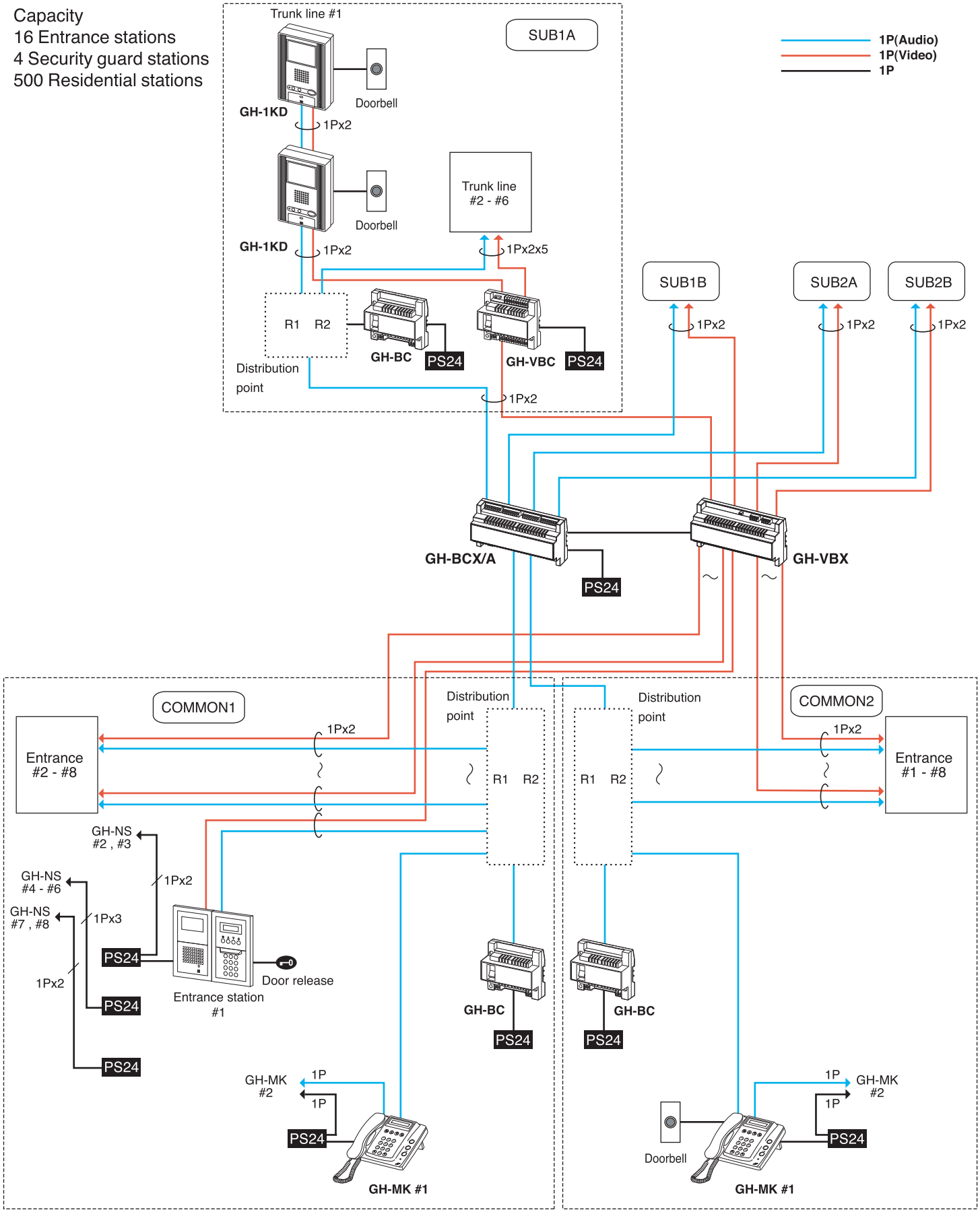

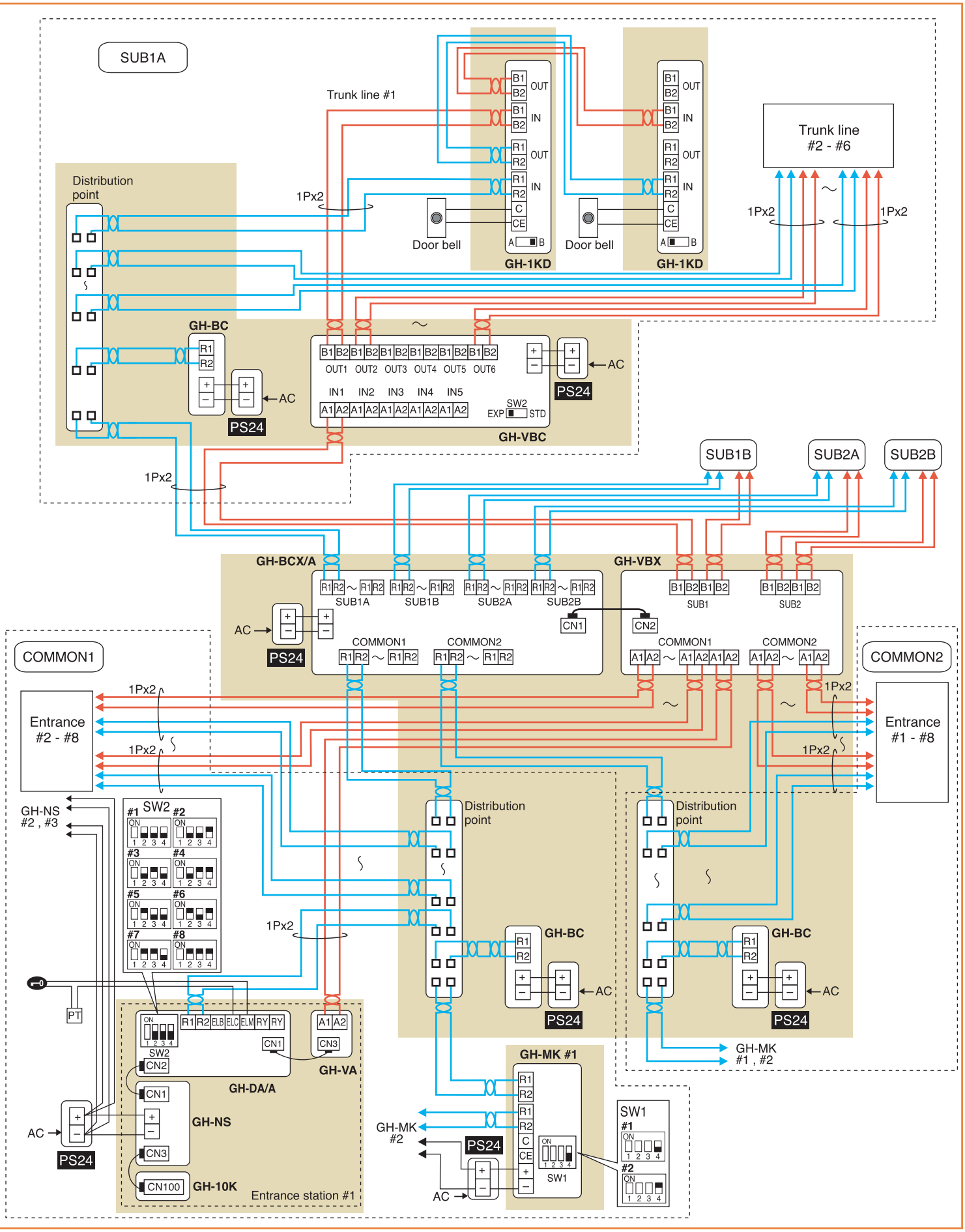
SUB1A
Trunk line #1
Distribution point
1Px2
Door bell
GH-1KD
Trunk line #2 - #6
GH-BC
AC
PS24
OUT1 OUT2 OUT3 OUT4 OUT5 OUT6
IN1 IN2 IN3 IN4 IN5
SW2 EXP STD
GH-VBC
SUB1B
SUB2A
SUB2B
GH-BCX/A
GH-VBX
SUB1A
CN1
CN2
SUB1
SUB2
COMMON1
COMMON2
Entrance #2 - #8
Entrance #1 - #8
GH-NS #2 , #3
SW2
PT
GH-DA/A
GH-VA
CN3
GH-NS
CN100
GH-10K
Entrance station #1
GH-MK #1
GH-MK #2
GH-MK #1 , #2
SW1

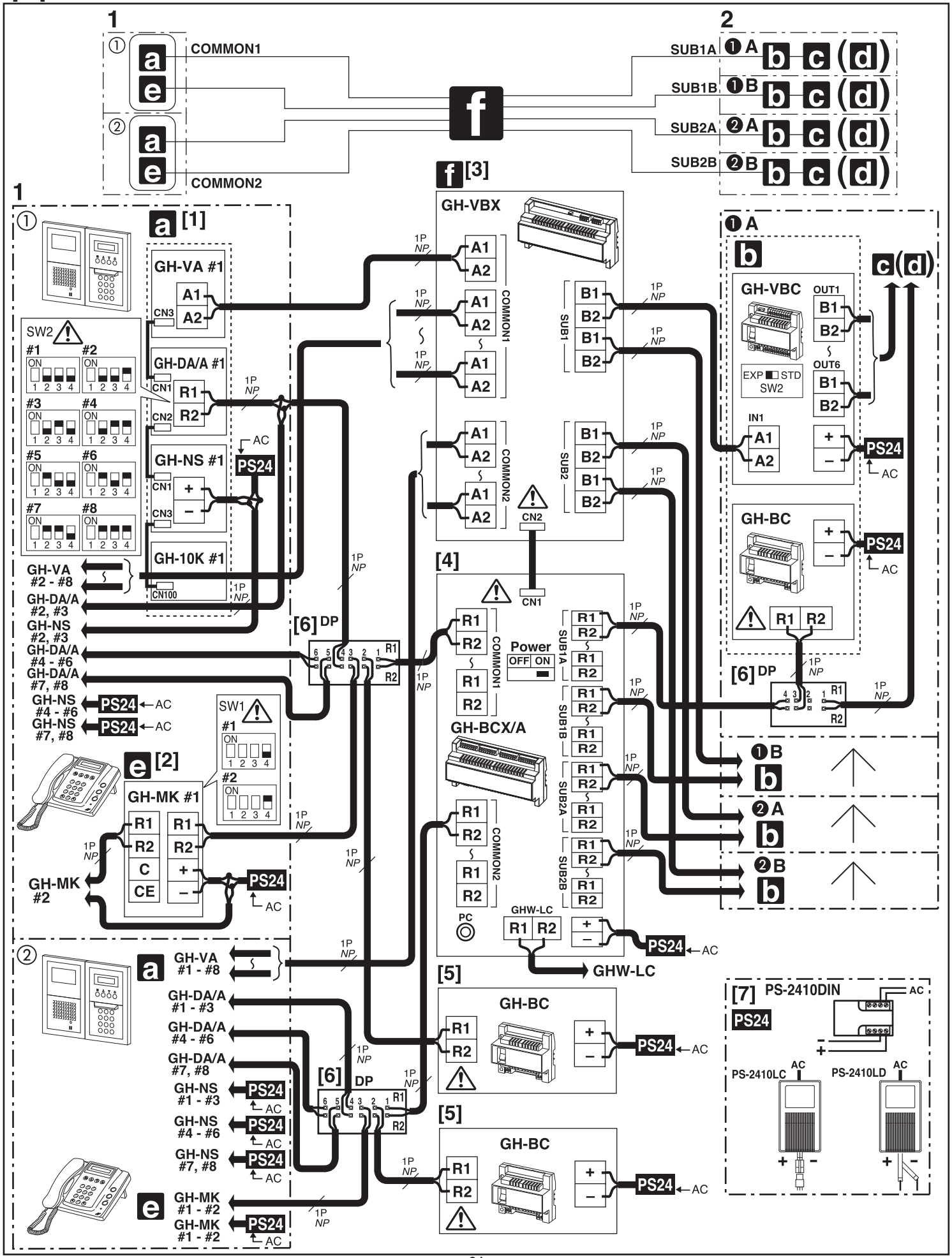
1
2
COMMON1
COMMON2
SUB1A
SUB1B
SUB2A
SUB2B
f [3]
GH-VBX
a [1]
GH-VA #1
GH-DA/A #1
GH-NS #1
GH-10K #1
SW2
GH-VA #2 - #8
GH-DA/A #2, #3
GH-NS #2, #3
GH-DA/A #4 - #6
GH-DA/A #7, #8
GH-NS #4 - #6
GH-NS #7, #8
e [2]
GH-MK #1
GH-MK #2
SW1
[4]
GH-BCX/A
Power
PC
GHW-LC
[5]
GH-BC
[6] DP
[7] PS-2410DIN
PS-2410LC
PS-2410LD
GH-VBC
GH-BC
PS24
AC
1P NP

4-4

Expanded System

1. Common trunk line: maximum of 2 trunk lines
2. Sub trunk line: maximum of 4 trunk lines
   Maximum of 125 units (maximum of 48 units for standard system)

- The wiring of the sub trunk line is the same as the standard system. For details, see 4-1 to 4-3.

[1] Entrance Station
- Basic System #1 - #5
- Expanded System (#1 - #8) x 2

⚠ When installing multiple entrance stations, make sure to set the GH-DA/A ID numbers (SW2).

[2] Security guard station GH-MK
- Standard System #1, #2
- Expanded System (#1, #2) x 2

⚠ When installing plural security guard stations, make sure to set the ID numbers (SW1).

[3] Expanded video Bus control unit GH-VBX

⚠ Connector cable length: 40 cm (15-3/4")

[4] Expanded Bus control unit GH-BCX/A

⚠ Trunk line terminals "COMMON 1", "COMMON 2", "SUB1A", "SUB1B", "SUB2A", and "SUB2B" have 4 sets of "R1" and "R2" terminals in each trunk terminal.
The terminals of same name are connected in common in the same trunk line terminal; therefore you can use those trunk line terminals as distribution points.

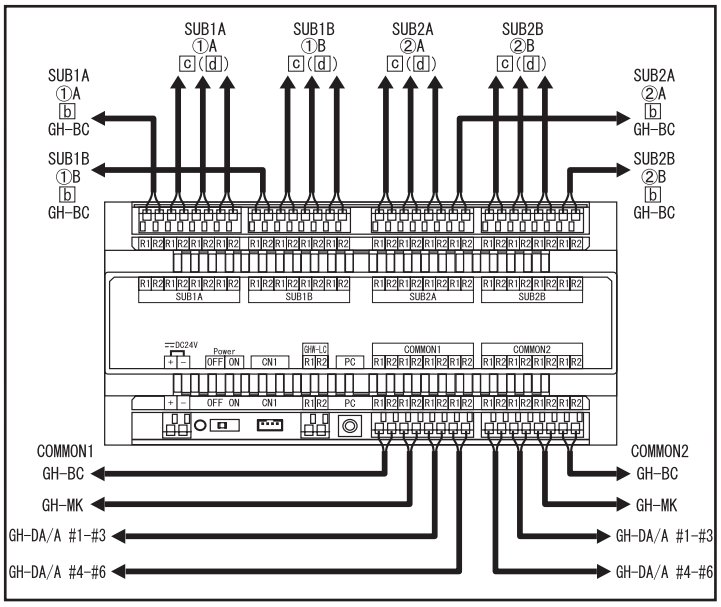

For connecting the lift control adaptor GHW-LC, refer to the GHW-LC Installation & Operation Manual.

[5] Bus control unit GH-BC

⚠ Don't connect 2 pieces or more of GH-BC in the same trunk line.

[6] Distribution terminal (junction): not included

[7] Power supply PS-2410LC, PS-2410LD, PS-2410DIN

NP: Non-polarized

NOTE: For communication between Entrance station and Residential station, one each communication path is available to "COMMON1 - SUB1" and "COMMON2 - SUB2". In case of crossover communication such as "COMMON1 - SUB2" or "COMMON2 - SUB1", it occupies entire communication path in the system.

4-5

Option Connector

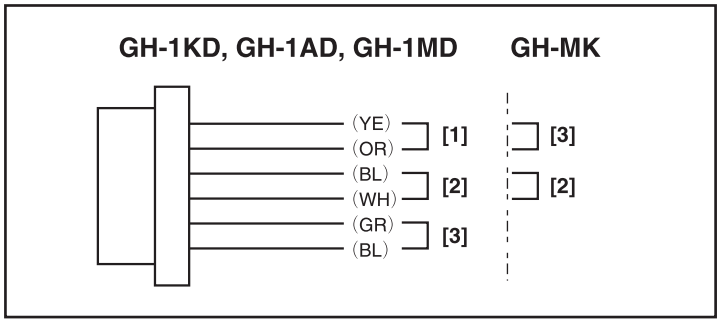

YE : Yellow
OR : Orange
BL : Blue
WH : White
GR : Gray
BL : Black

The option connector is included with GH-1KD-SW and GH-1AD-SW.
The separate option connector is required for GH-1KD, GH-1MD, GH-1AD, and GH-MK.
Please consult your AIPHONE Distributor.

⚠ To prevent shorts, be sure to cut unused lead wires at the bottom and insulate the ends.

[1] Automatic Entry (Doctor Call)
Short YELLOW and ORANGE wires together to enable the automatic entry function. See 11-6.

[2] External buzzer
Using the external signaling relay GH-RY allows for the external buzzer to be linked during calling. See 4-6.

[3] Service Button
External unit such as light can be operated with the service button.
Contact capacity
Maximum overload 24V AC/DC, 1A
Minimum overload 5V DC, 100mA

⚠ The Service button is not available on the GH-1MD.

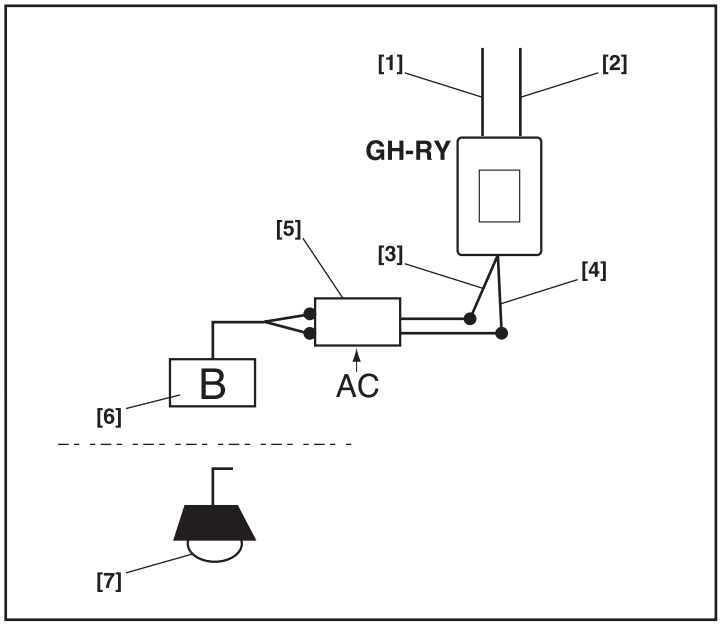

External Signaling Relay Connection

[1] Input wire (blue)
[2] Input wire (white)
[3] Output wire (orange)
[4] Output wire (orange)
[5] Timer (not included)
[6] Buzzer
[7] Entrance light

- GH-RY contact specifications: AC/DC 24 V, 0.5 A ([3], [4])

⚠ When connecting GH-RY to GH-1AD, GH-1KD, GH-1MD or GH-MK, the separate option connector is required. Please consult your AIPHONE Distributor.

5 NAMES (ENTRANCE STATION)

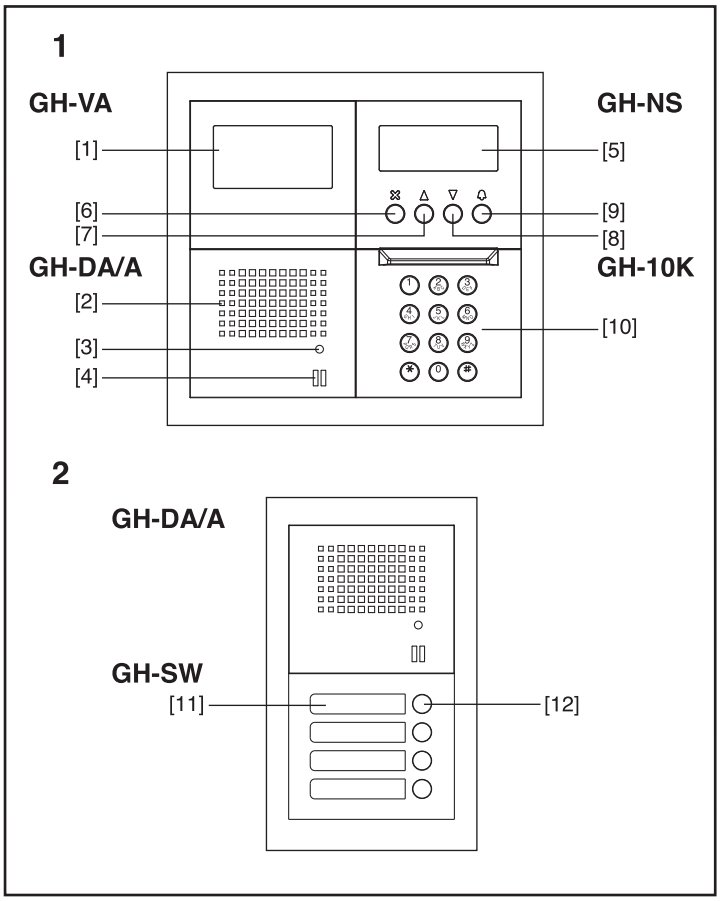

Entrance Station

1. Digital name scrolling entrance station
- Camera module GH-VA

[1] Camera

- Speech module GH-DA/A

[2] Speaker
[3] In Use LED
[4] Microphone

- Digital name scrolling module GH-NS

[5] Display
[6] Cancel button (or set and return)
[7] Back search button (or move cursor to the left)
[8] Forward search button (or move cursor to the right)
[9] Call button (or set and move forward)

- Digital keypad module GH-10K

[10] 10-key (1 - 0, ∗, #)

2. Direct selection
- Switch module GH-SW

[11] Directory card
[12] Call button

6 NAMES (RESIDENTIAL STATION)

6-1

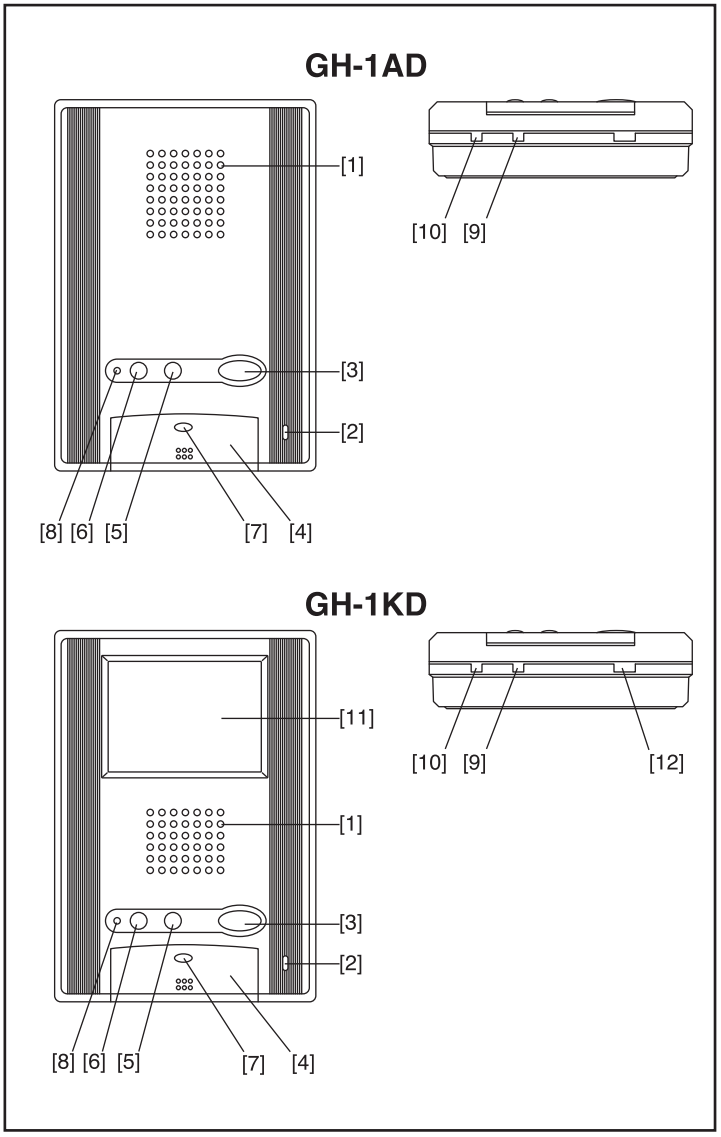

Residential station (GH-1AD, GH-1KD)

[1] Speaker
[2] Microphone
[3] Door release button / Monitor button (GH-1KD only)
[4] Talk button
[5] Light button / Security guard station call button
[6] Service button (option)
The service button is standard equipment with the GH-1AD-SW and GH-1KD-SW.
[7] Talk LED
[8] Call tone off LED
[9] Receive volume control
[10] Call tone volume control
[11] Video monitor 3.5 inch color LCD
[12] Monitor brightness control

6-2

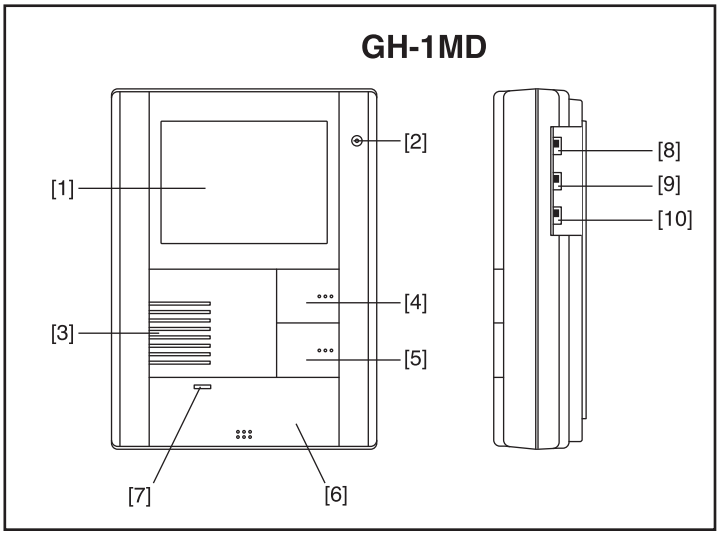

Residential station (GH-1MD)

[1] Video monitor 4 inch black and white CRT
[2] Microphone
[3] Speaker
[4] Light button / Security guard station call button
[5] Door release / Monitor button
[6] Talk button
[7] Talk LED
[8] Monitor brightness control
[9] Receive volume control
[10] Call tone volume control

7 NAMES (SECURITY GUARD STATION)

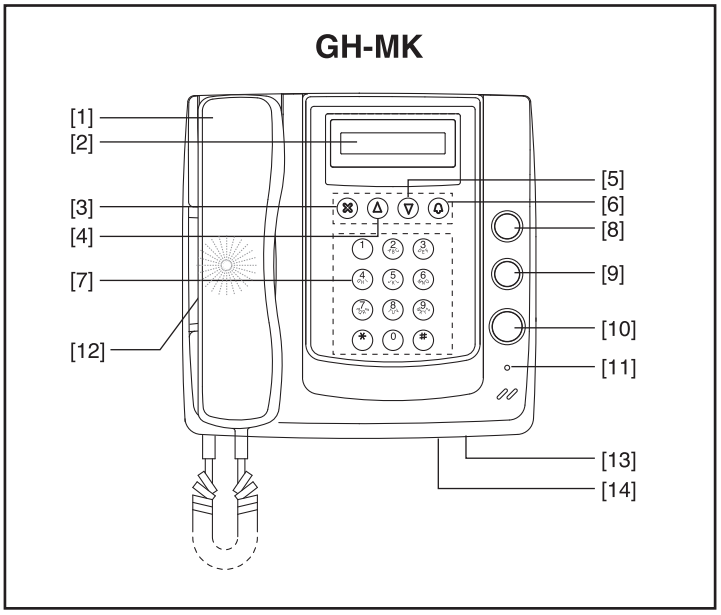

Security Guard Station

[1] Handset
[2] Display
[3] Cancel button (or set and return)
[4] Back search button (or move cursor to the left)
[5] Forward search button (or move cursor to the right)
[6] Call button (or set and move forward)
[7] 10-key (0 - 9 ∗, #)
[8] Service button (option)
[9] Light button
[10] Door release button
[11] Off hook LED
[12] Speaker
[13] Call tone volume control
[14] RS-232 connection, 3.5 mm port

8 SETTING UP (ENTRANCE STATION)

8-1

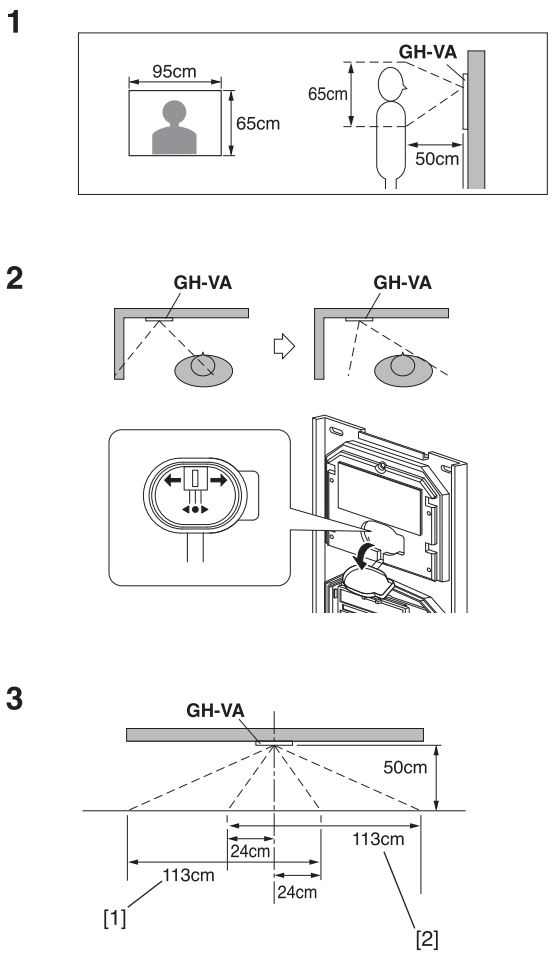

Adjusting the Camera Angle

1. View from the initial camera position
2. Changing the camera angle

• Remove the rubber cap. Move the lever to the desired position.

∗ Do not forget to reset the rubber cap.

3. Image view area after adjustment

[1] When camera has been adjusted to the left

[2] When camera has been adjusted to the right

8-2

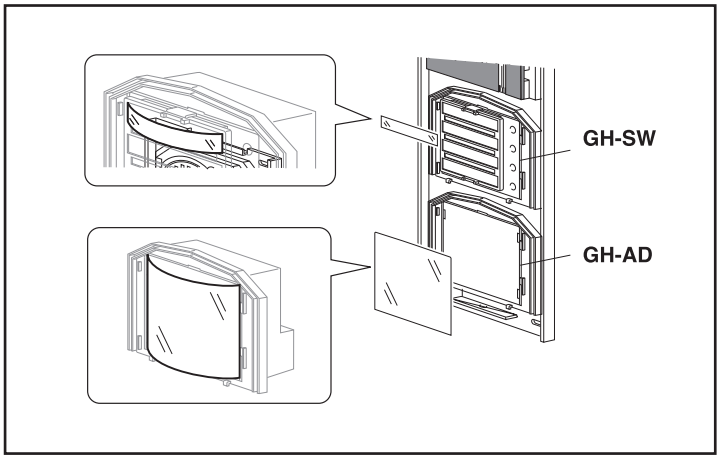

Entering Names and Addresses

- Remove the resident name/address plate or paper by pressing the left or right end. (Peel off the plastic film.)
- Use a permanent pen to write the resident name and address on the transparent plate and mount the plate on the module.

8-3

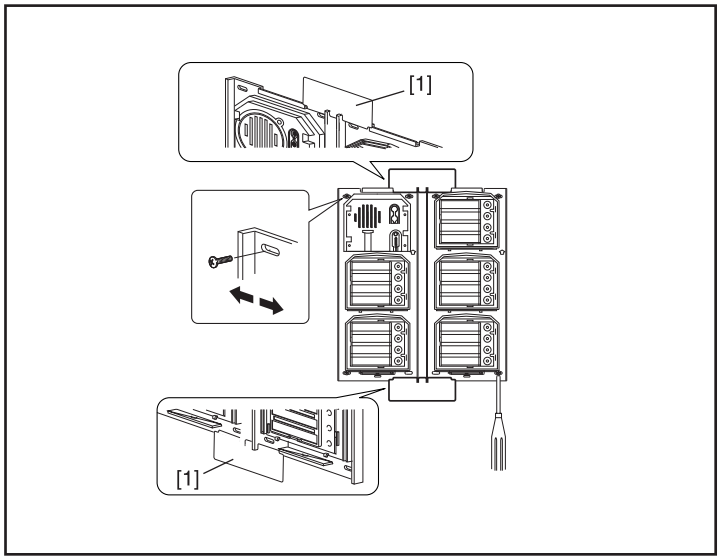

Making Adjustments with the Mounting Gauge

[1] Mounting gauge

- To mount multiple rows of panels, apply the mounting gauge to the mounting bracket. While using the mounting gauge to make adjustments, tighten the screws.

∗ There is a mounting gauge for the built-in back box of GF-2B and GF-3B.

8-4

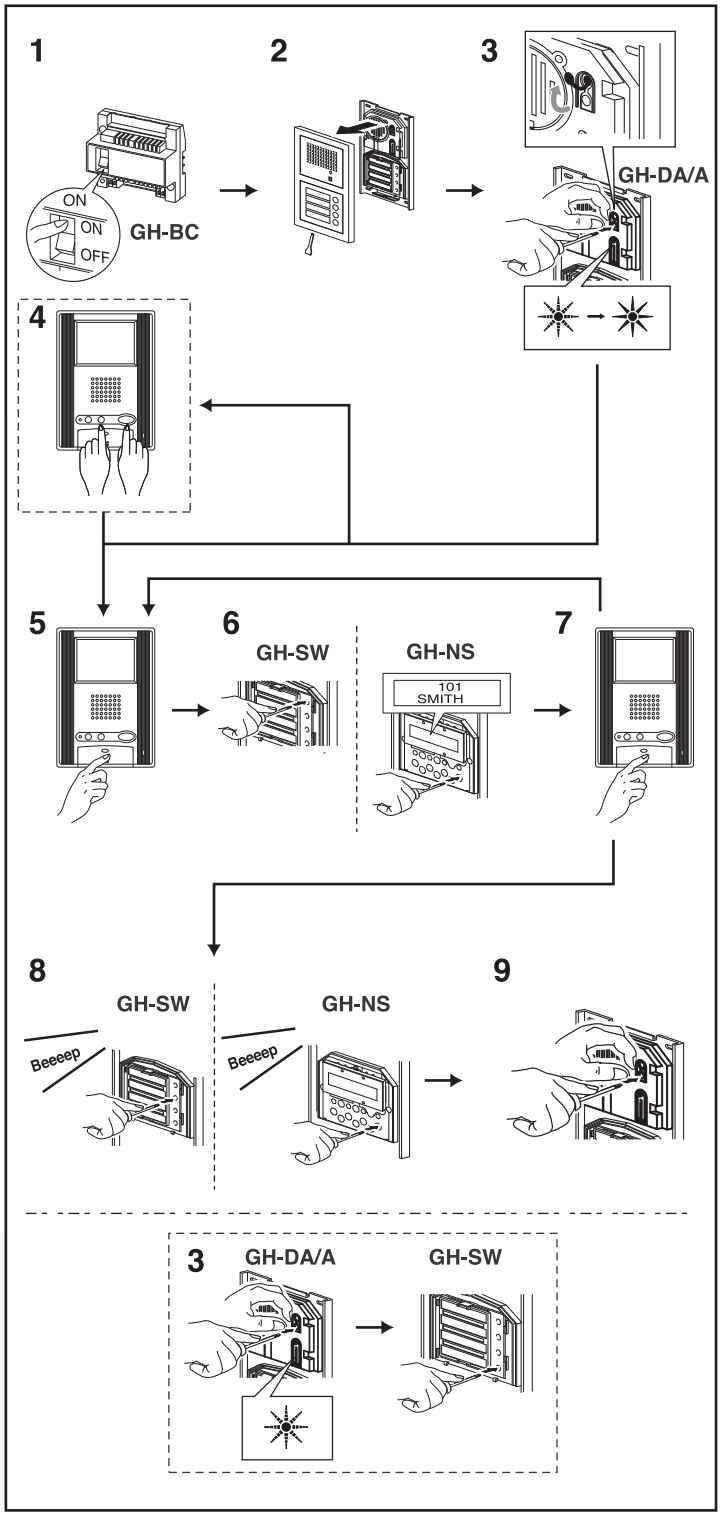

Setting up the System

1. Make sure that all units are installed and wired properly. Turn on the power switch in GH-BC. When the system includes GH-NS, program the resident information (names and room numbers) in advance. (For details, see 8-5)
2. Loosen the base screw and open and remove the front panel.
3. Set the system to program mode.
- Lift up the rubber cap.
- Press the program switch once. Use any long thin tool, such as a fine screwdriver.
- The In-Use LED will blink for approximately 15 seconds for entrance stations with GH-SW and between approximately 6 to 15 seconds for entrance stations with GH-NS.

Continue to the appropriate step according to the setting up status of the residential station.

- If setting up the link for the first time after mounting the residential station => 4.
- In cases other than that stated above => 5.

4. Perform the operation below only if "etting up the link for the first time after mounting the residential station."
Once the In-Use LED is lit solid, press the door release button while holding down the light button of the residential station and continue to press the buttons until a beep is emitted approximately 3 seconds later.
Performing the operation in step 4 will delete all setting data in the residential station and return it to the initial settings.
5. Once the In-Use LED is lit solid, press the talk button of the first residential station. The corresponding communication channel will be established.
For GH-MK, lift the handset.
6. For GH-SW, press the (corresponding) call button and release quickly. (Do not press the button longer than 1 second.) For GH-NS, display the assigned room No. and press the call button (bell symbol). (Do not press the button longer than 1 second.)
An electronic beep will be emitted once.
7. Press the talk button to end. Repeat these steps and program all residential stations.
For GH-MK, hang up the handset.

* If there is a second residential station installed in a single apartment, program the residential station following the same method detailed in steps 4 through 6. An electronic beep will be emitted twice. An electronic sound will be emitted three times for a third residential station and four times for a fourth residential station.

8. Correcting or changing the settings
- Press and hold down the call button of GH-SW or GH-NS until you hear a continuous beep. For GH-NS,display the room you want to correct and reprogram all the residential stations in the single apartment (following steps 4 and following).

9. Ending programming
- Push the GH-DA/A program switch. The In-Use LED will go off.
- Replace the cap.

10. Checking the programming
- Pressing the program switch for 5 seconds or more will light up the In-Use LED.
- In the case of GH-SW, an electronic beep will be emitted once when the programming was successful. If the programming was unsuccessful, an alarm beep will be emitted.
- For GH-NS, use the arrow keys or 10-key to select the room and press the call button. An electronic sound will be emitted once when the programming was successful. If the programming was unsuccessful, an alarm sound will be emitted.
- Press the programming switch to end the check.

⚠If power supply is interrupted during programming, the programmed information might be lost. In such cases, retry the programming again from the beginning.

NOTES: 1. Setting up the light button (GH-SW) In Step 3, press the call button of the assigned GH-SW while the In-Use LED is blinking (within 15 seconds in program mode), the light button will be set up. (The assigned call button cannot be used as the residential call button simultaneously.) An electronic beep will be emitted once.

2. If you attempt to setup a fifth residential station when four residential stations have already been established, an alarm beep will be emitted. To cancel the communication link, display the assigned name and press the call button for at least 3 seconds. A continuous beep will be emitted to verify the communication link has been cleared.

8-5

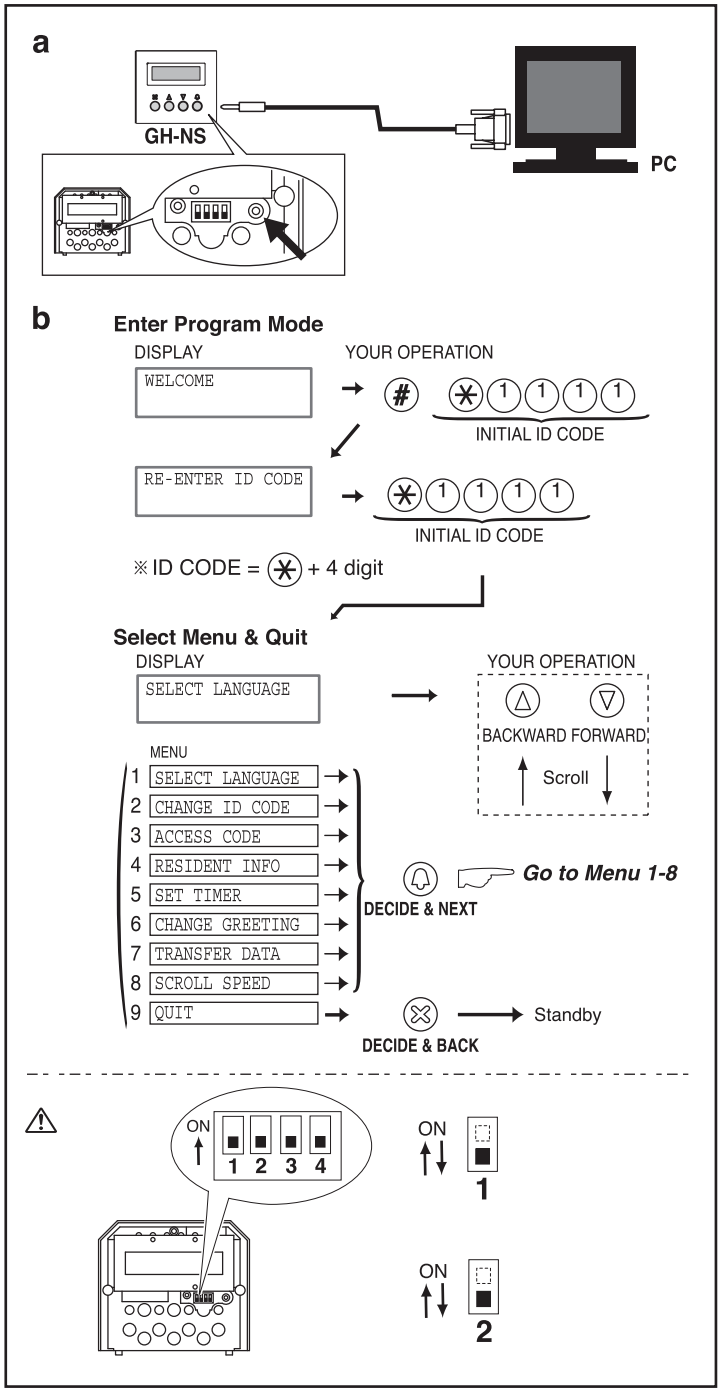

Programming (GH-NS)

a. Programming with a PC

- You can use a PC to enter data and write in or change resident names.
- Use the connection cable that comes with GH-NS to connect your PC to GH-NS.
- In your PC, install the setup tool program from the CD that comes with the GH-BC.

* For information on how to use the setup tool, see the text (.txt) file that is installed in the same folder as the setup tool (.exe). Save programmed data and resident information data to your PC is recommended.

b. Programming with GH-NS and GH-10K

- Confirm that "Welcome" is shown on the Display, indicating that the system is in standby mode.

* You can change the "Welcome" text.

- First, set the system to program mode.
  Press " #✱ " and enter the 4-digit ID code.
  RE-ENTER ID CODE is displayed, re-enter " ✱ " and the 4-digit ID code.
  The initial ID code is ①①①① .

* Before you begin programming, we recommend that you register a new exclusive ID code for yourself so that the system is not accessed by others. (For details, see 8-6.)

⚠ If you have forgotten your ID code, set the switch (#1) to ON for approximately 2 seconds. The ID code will be reset to the default setting of "∗1111".

NOTE: To display only resident name without room number; Set the switch (#2) to ON.

1

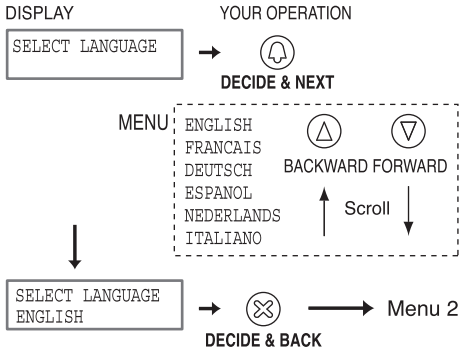

2

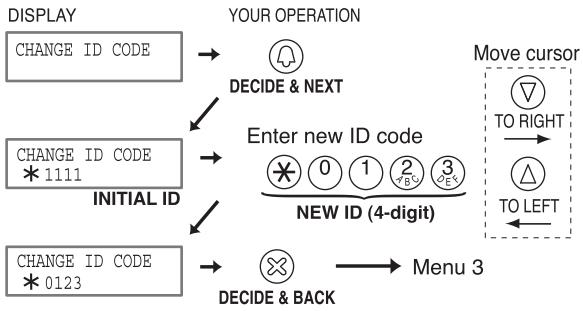

※ ID CODE = ✳ + 4 digit

3

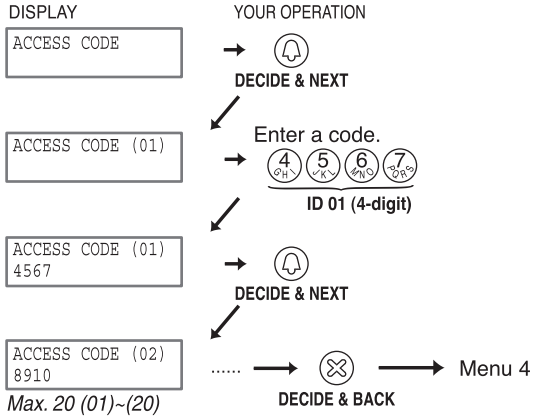

Max. 20 (01)~(20) programmable

4

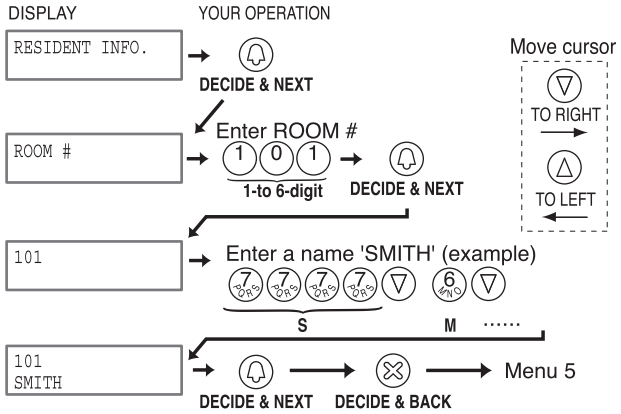

5

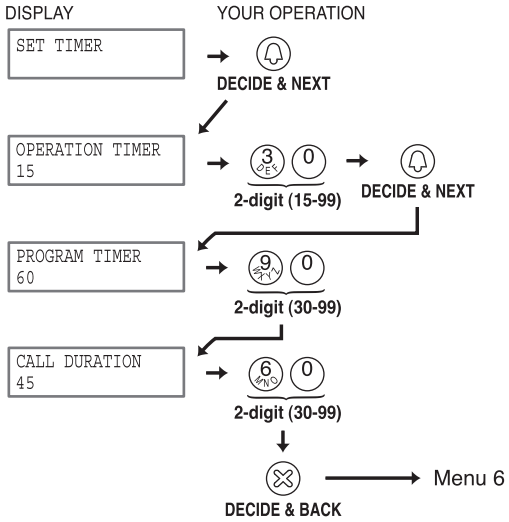

6

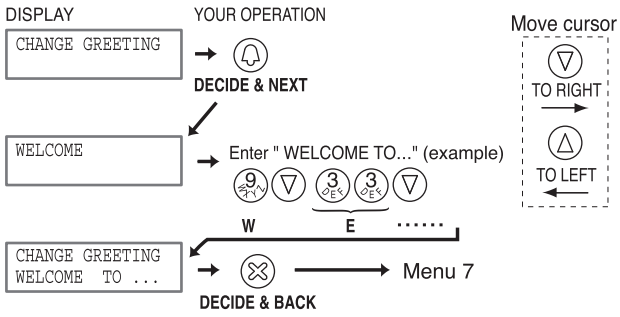

7

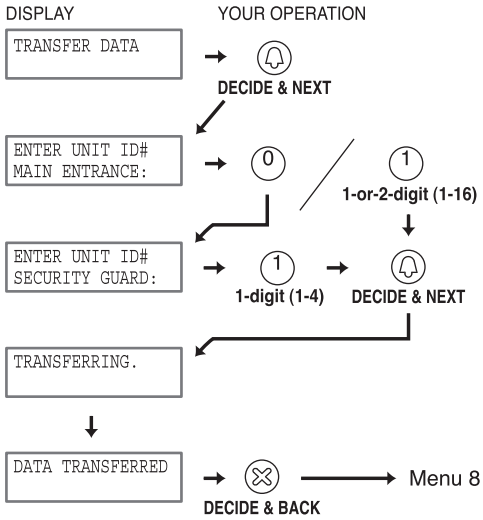

8

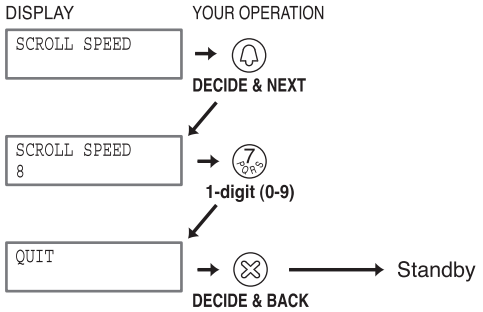

8-6

Program Mode (GH-NS)

1. Menu 1: Select language
   Choose language to be displayed on GH-NS.
   ⚠When selects "ITALIANO" as display language on GH-NS, use the setup tool program Ver.2.2 or new. If the setup tool program version is not corresponding, the display language becomes English. Download the latest version from our web site http://www.aiphone.com.
   When "ITALIANO" is not in the menu on GH-NS, Italian cannot be displayed. At this time, if "ITALIANO" is chosen and programmed with setting tool Ver.2.2 or new, it becomes a communication error. Try to reprogram in another language.
2. Menu 2: Change ID code
   Enter new ID code starting with "∗", then 4-digit number. (Example: ∗1234)
3. Menu 3: Set access code
   Enter new 4-digit Access Code. (Example: 1234)
   • (0000) cannot be registered as an access code.
   • Recommend not to use a simple access code such as (1111).
4. Menu 4: Write in resident information
   Register room #s and resident names.
   Enter room #s using 1 to 6-digit characters.
   Enter resident name (up to 16 characters).
5. Menu 5: Set input timeout timer
   Operation Timer: If the operation panel is not operated for a certain period of time, the system returns to standby mode. Programmable from 15 to 99 seconds.
   Program Timer: If, in Residential Programming mode, the operation panel is not operated for a certain period of time, it automatically cancels the programming mode. Programmable from 30 to 99 seconds.
   Call Timer: Call from Entrance panel expires in a certain period of time. Programmable from 30 to 99 seconds.
6. Menu 6: Change greeting
   Enter greeting message (up to 160 characters).
7. Menu 7: Transfer link information
   ⚠With Expanded System, enter unit ID# for transferring Entrance stations and Security guard stations as below;
   • Entrance station: Connected to same common line - "programmed ID#" as is. (e.g. transferring to #2: Enter "2"), or Connected to another common line - "programmed ID# plus 8" (e.g. transferring to #1: 1+8=9, Enter "9")
   • Security guard station: Connected to same common line - "programmed ID#" as is. (e.g. transferring to #2: Enter "2"), or Connected to another common line - "programmed ID# plus 2" (e.g. #1: 1+2=3, Enter "3")

9 SETTING UP (SECURITY GUARD STATION)

9-1

a

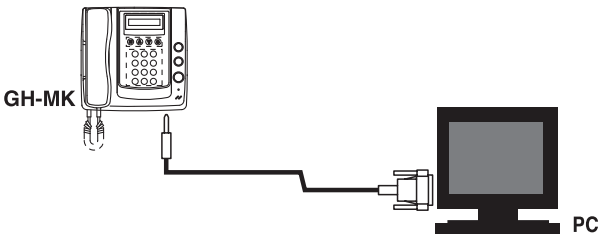

b **Enter Program Mode**

DISPLAY: AIPHONE → # ✳ 1 1 1 1 (INITIAL ID CODE)

DISPLAY: RE-ENTER ID CODE → ✳ 1 1 1 1 (INITIAL ID CODE)

※ID CODE = ✳ + 4 digit

Select Menu & Quit

DISPLAY: SELECT LANGUAGE

YOUR OPERATION: △ ▽ BACKWARD FORWARD, Scroll ↑ ↓

MENU

1 SELECT LANGUAGE →
2 CHANGE ID CODE →
3 RESIDENT INFO →
4 SET TIMER →
5 PROGRAMMING →
6 TRANSFER DATA →
7 VERIFY PROGRAM →
8 QUIT

DECIDE & NEXT → *Go to Menu 1-7*

DECIDE & BACK → Standby

1 **Menu 5**

DISPLAY: PROGRAMMING<<

YOUR OPERATION: DECIDE & NEXT

DISPLAY: PROGRAMMING<< CONNECTING...

DISPLAY: PROGRAMMING<< CONNECTING...

DECIDE & BACK → Menu 6

⚠1

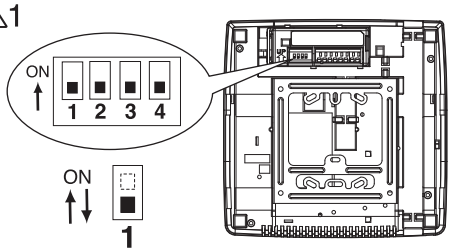

2

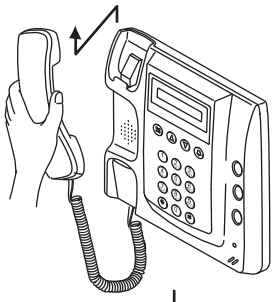

3

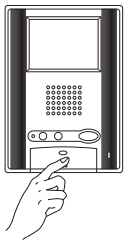

4

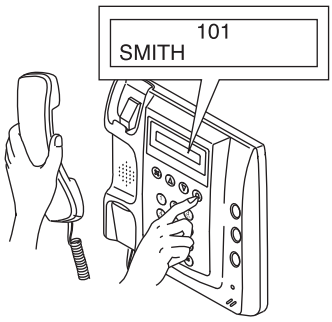

5

6

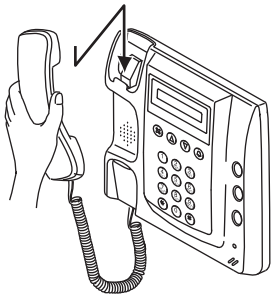

9-1

Programming (GH-MK)

- Make sure that all units are installed and wired properly. Turn on the power switch to GH-BC. Program the resident information (names and room numbers) in advance.

a. Programming with a PC

- You can use a PC to enter data and write in or change resident names.
- Use the connection cable that comes with GH-MK to connect your PC to GH-MK.
- In your PC, install the setup tool program from the CD that comes with GH-BC.

∗ For information on how to use the setup tool, see the text (.txt) file that is installed in the same folder as the setup tool (.exe). Save programmed data and resident information data to your PC is recommended.

b. Programming with GH-MK

- Confirm that "AIPHONE" is shown on the Display, indicating that the system is in standby mode.
- First, set the system to program mode. (For details, see above.) Press " #⊛ " and enter the 4-digit ID code.
  RE-ENTER ID CODE is displayed, re-enter " ⊛ " and the 4-digit ID code.
  The initial ID code is ①①①① .

∗ Before you begin programming, we recommend that you register a new exclusive ID code for yourself so that the system is not accessed by others. (For details, see 9-2.)

1. Menu 5: Programming
2. Lift the handset (security guard station).
3. Press the talk button on the first residential station. The corresponding communication channel will be established. For other GH-MK, lift the handset.
4. Use the search button to display the assigned name and then press the call button.
5. If an electronic beep is emitted once, the residential station has been set up successfully. (If an electronic sound is emitted twice, it is for the second residential station.) Press the talk button to end the communication channel. Go to the location of each residential station and program them one by one in accordance with the programming procedures.
6. Replace the handset (security guard station).

⚠1. If you have forgotten your ID code, set the switch (#1) to ON for approximately 2 seconds. The ID code will be reset to the default setting of "∗1111".

⚠2. While data is being entered into the system, the entire system cannot function (including emergency calls).

NOTE: If you attempt to setup a fifth residential station when four residential stations have already been established, an alarm beep will be emitted. To cancel the communication link, display the assigned name and press the call button for at least 3 seconds. A continuous beep will be emitted to verify the communication link has been cleared.

9-2

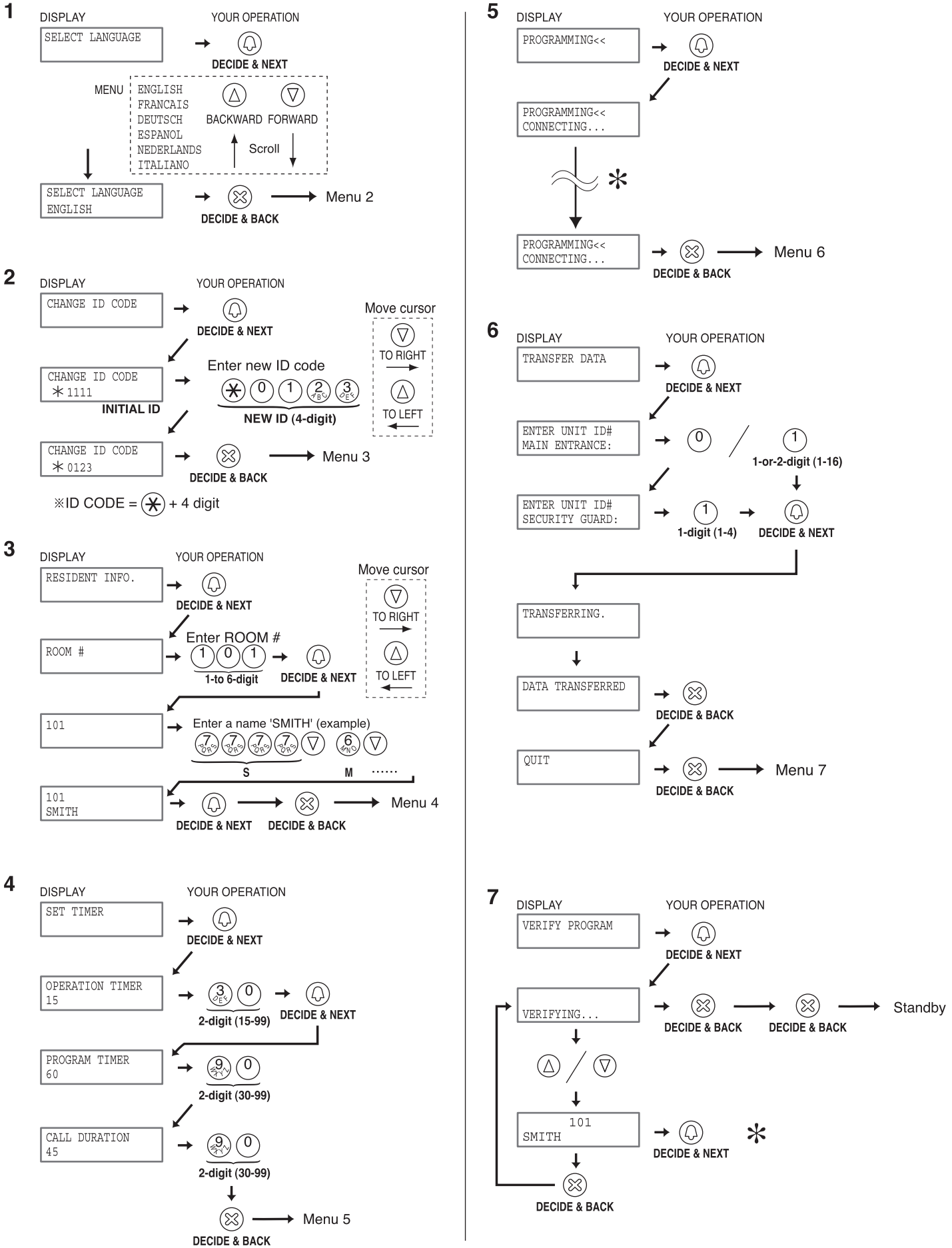
1
DISPLAY
YOUR OPERATION
SELECT LANGUAGE
DECIDE & NEXT
MENU
ENGLISH
FRANCAIS
DEUTSCH
ESPANOL
NEDERLANDS
ITALIANO
BACKWARD
FORWARD
Scroll
SELECT LANGUAGE
ENGLISH
DECIDE & BACK
Menu 2
2
DISPLAY
YOUR OPERATION
CHANGE ID CODE
DECIDE & NEXT
Move cursor
TO RIGHT
TO LEFT
CHANGE ID CODE
✳1111
INITIAL ID
Enter new ID code
NEW ID (4-digit)
CHANGE ID CODE
✳0123
DECIDE & BACK
Menu 3
※ID CODE = ✳ + 4 digit
3
DISPLAY
YOUR OPERATION
RESIDENT INFO.
DECIDE & NEXT
Move cursor
TO RIGHT
TO LEFT
ROOM #
Enter ROOM #
1-to 6-digit
DECIDE & NEXT
101
Enter a name 'SMITH' (example)
S
M
101
SMITH
DECIDE & NEXT
DECIDE & BACK
Menu 4
4
DISPLAY
YOUR OPERATION
SET TIMER
DECIDE & NEXT
OPERATION TIMER
15
2-digit (15-99)
DECIDE & NEXT
PROGRAM TIMER
60
2-digit (30-99)
CALL DURATION
45
2-digit (30-99)
DECIDE & BACK
Menu 5
5
DISPLAY
YOUR OPERATION
PROGRAMMING<<
DECIDE & NEXT
PROGRAMMING<<
CONNECTING...
PROGRAMMING<<
CONNECTING...
DECIDE & BACK
Menu 6
6
DISPLAY
YOUR OPERATION
TRANSFER DATA
DECIDE & NEXT
ENTER UNIT ID#
MAIN ENTRANCE:
1-or-2-digit (1-16)
ENTER UNIT ID#
SECURITY GUARD:
1-digit (1-4)
DECIDE & NEXT
TRANSFERRING.
DATA TRANSFERRED
DECIDE & BACK
QUIT
DECIDE & BACK
Menu 7
7
DISPLAY
YOUR OPERATION
VERIFY PROGRAM
DECIDE & NEXT
VERIFYING...
DECIDE & BACK
DECIDE & BACK
Standby
101
SMITH
DECIDE & NEXT
DECIDE & BACK

9-2

Program Mode (GH-MK)

1. Menu 1: Select language
   Choose language to be displayed on GH-MK.
   ⚠When selects "ITALIANO" as display language on GH-MK, use the setup tool program Ver. 2.2 or new. If the setup tool program version is not corresponding, the display language becomes English. Download the latest version from our web site http://www.aiphone.com.
   When "ITALIANO" is not in the menu on GH-MK, Italian cannot be displayed. At this time, if "ITALIANO" is chosen and programmed with setting tool Ver. 2.2 or new, it becomes a communication error. Try to reprogram in another language.
2. Menu 2: Change ID code
   Enter new ID code starting with "∗", then 4-digit number. (Example: ∗1234)
3. Menu 3: Write in resident information
   Register room #s and resident names.
   Enter room #s using 1 to 6-digit characters.
   Enter resident name (up to 16 characters).
4. Menu 4: Set input timeout timer
   Operation Timer: If the operation panel is not operated for a certain period of time, the system returns to standby mode. Programmable from 15 to 99 seconds.
   Program Timer: If, in Resident Programming mode, the operation panel is not operated for a certain period of time, it automatically cancels the programming mode. Programmable from 30 to 99 seconds.
   Call Time: Call from Entrance panel expires in a certain period of time. Programmable from 30 to 99 seconds.
5. Menu 5: Programming

∗ For the programming procedures, see 9-1.

6. Menu 6: Transfer link information
   ⚠With Expanded System, enter unit ID# for transferring Entrance stations and Security guard stations as below;
   • Entrance station: Connected to same common line - "programmed ID#" as is. (e.g. transferring to #2: Enter "2"), or Connected to another common line - "programmed ID# plus 8" (e.g. transferring to #1: 1+8=9, Enter "9")
   • Security guard station: Connected to same common line - "programmed ID#" as is. (e.g. transferring to #2: Enter "2"), or Connected to another common line - "programmed ID# plus 2" (e.g. #1: 1+2=3, Enter "3")
7. Menu 7: Link check (for maintenance purposes)

∗ An electronic sound will be emitted once if link is normal. If the link is abnormal, an alarm sound will be emitted.

10 OPERATIONS (ENTRANCE STATION)

10-1

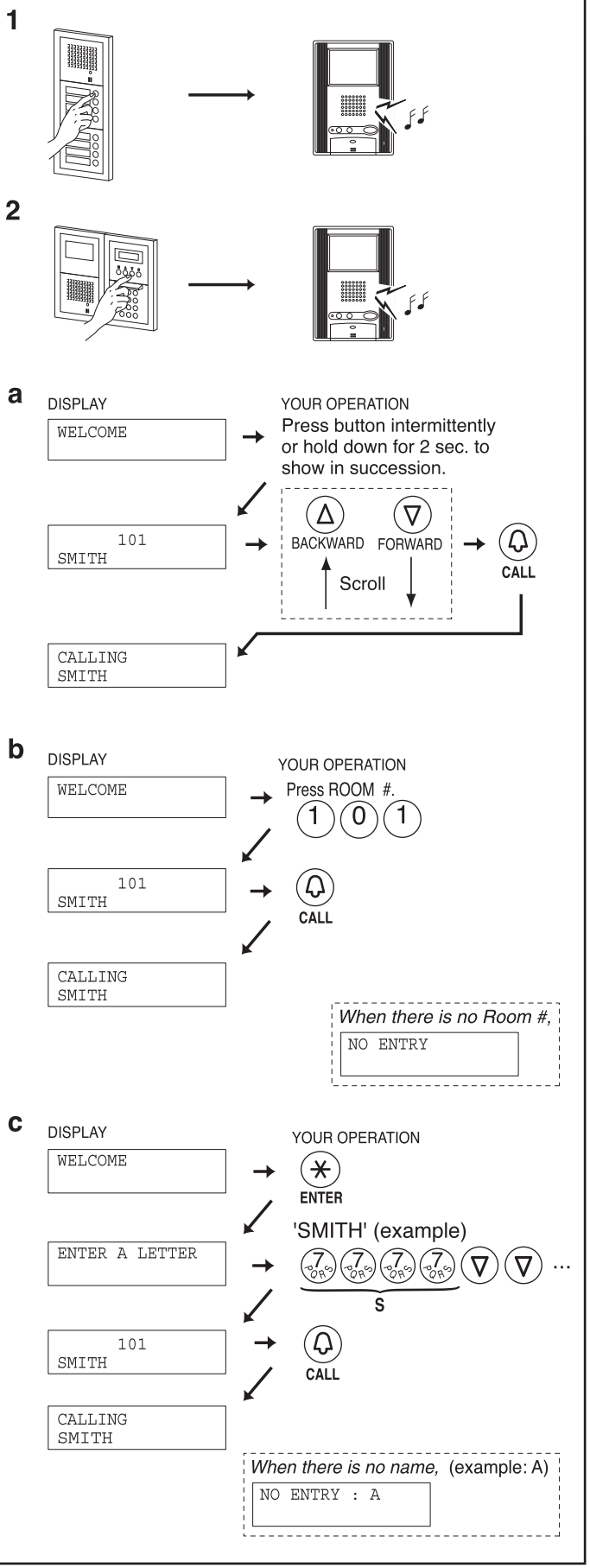

Calling a Residential Station

1. Direct Selection GH-SW

- Press the call button for the residence that you want to call. You will hear a low-volume call tone from the entrance station.

2. Digital name scrolling GH-NS

- Display the resident name you want to call and press the call button. You will hear a low-volume call tone from the entrance station.

a. Making a call by name scrolling
b. Making a call by entering the room number
c. Making a call by entering letters and selecting the corresponding name

NOTE: If you push a call button that has been programmed to activate a light, the entrance light will turn on. (GH-SW only.)

10-2

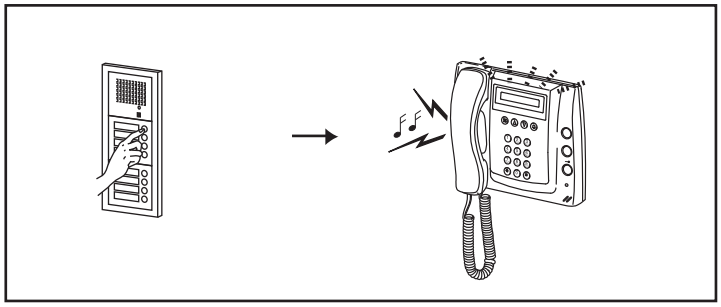

Calling the Security Guard Station

Press the call button once. You will hear a low-volume call tone from the entrance station.

10-3

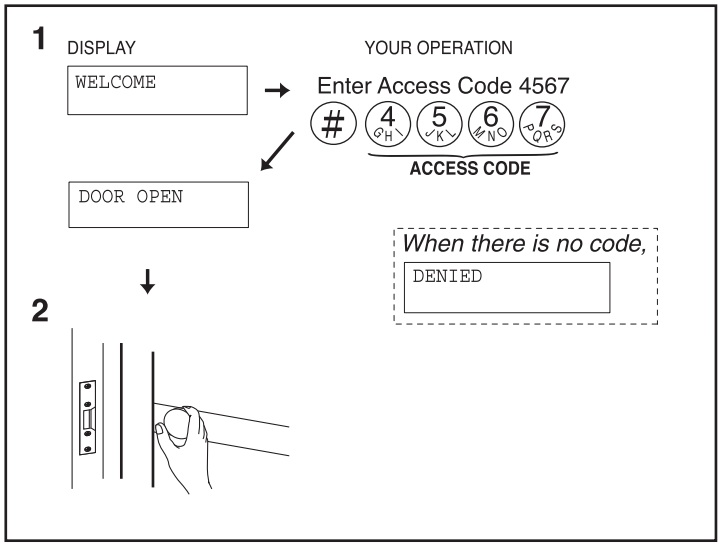

Door Release

1. Enter the access code. (8-6, Menu 3)
2. The door release will be activated at the entrance station.

11 OPERATIONS (RESIDENTIAL STATION)

11-1

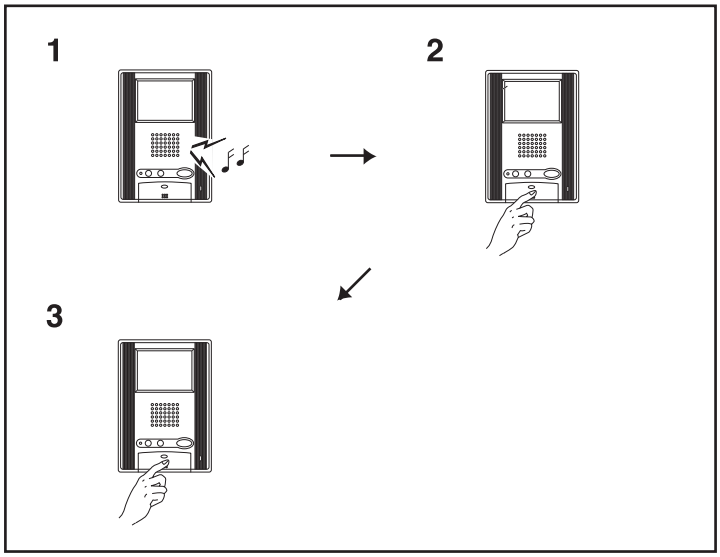

Replying to a Call

1. When the call is from an entrance station or security guard station, the call tone will ring at the residential station for approximately 10 seconds. An image will be displayed on monitor residential station.
2. On the residential station, press the talk button within the set time (see 8-6, menu 5, 9-2, menu 4) to respond and talk handsfree.
   The LED lights when you talk, and goes off as you listen to the caller.

- If you press the talk button for at least one second while talking handsfree, a beep will be emitted and you can communicate by press-to-talk communication.
- In press-to-talk communication, you press the talk button to talk and release it to listen.

3. When you are done talking, press and hold down the talk button.

* The communication will be ended automatically after approximately 1 minute when handsfree communication is used at the residential station or after approximately 3 minutes when handset is used.

NOTE: When "call tone volume control" is put in MUTED position, "Call tone off LED" on GH-1KD & GH-1AD and TALK LED on GH-1MD blinks at 5 second intervals.

11-2

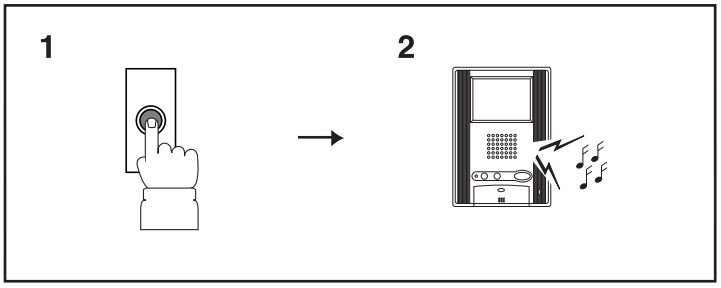

Calling from the Doorbell (at Individual Door)

1. The doorbell button is pushed. A call tone sounds as long as the button is held down.
2. A different call tone sounds (there is no communication available).

11-3

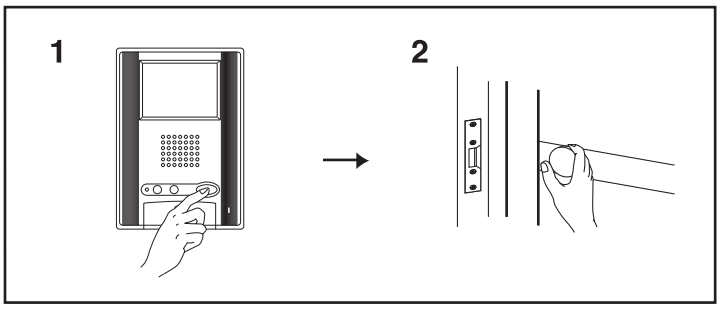

Door Release

1. Press the door release button while in communication.
2. The door release function will activate on the entrance station that is in communication.

* Depending on the electric door release system that you use, the door release may be active only while the door release button is pressed.

11-4

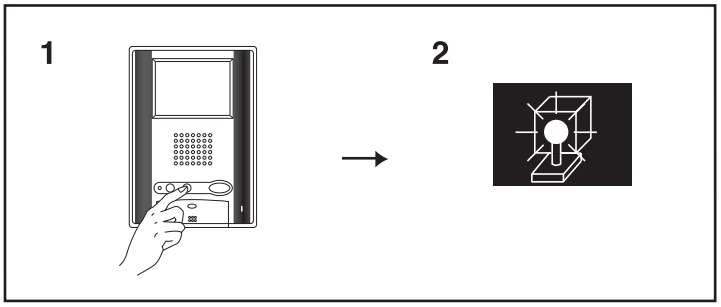

Turning on the Entrance Light

1. Press the light button once while in communication.
2. The outside light of the entrance will turn on for the preset duration of time. (4 -5)

11-5

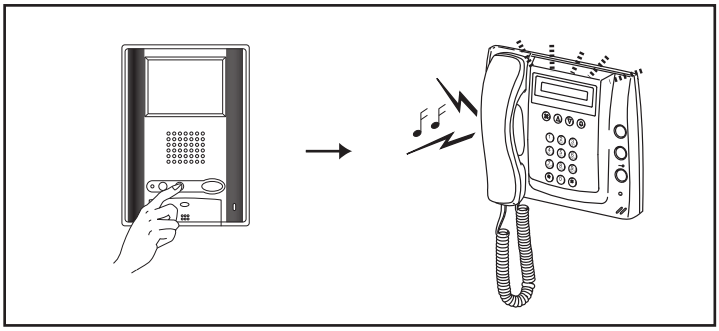

Calling the Security Guard Station

Press the light/security guard station call button on the residential station. You will hear a low-volume call tone. When the system is being used for communication, an in-use tone will be heard at the residential station. (The call is only invalid when a communication link has not been established.)

11-6

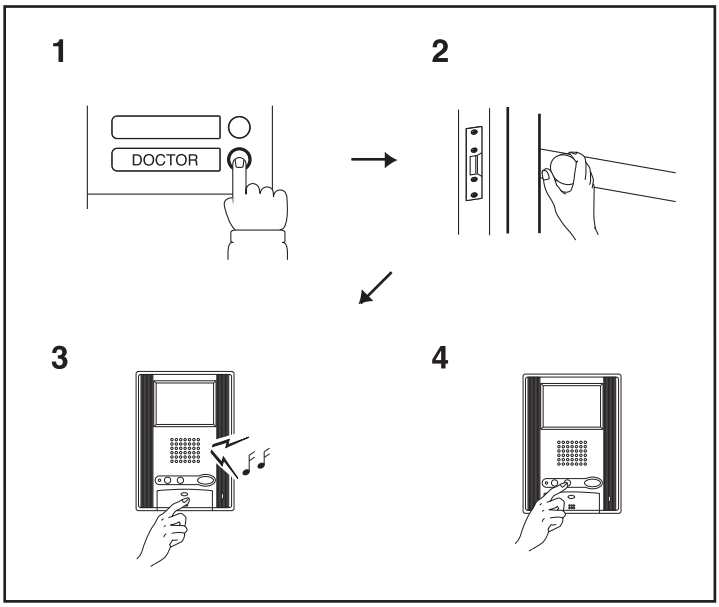

Automatic Entry (Doctor Call) Option

1. A visitor presses the call button that has been assigned for automatic entry.
2. The door is unlocked instantly.
3. The residential station for which the automatic entry function is set is called. Press the talk button as necessary to respond.
4. Switching the automatic entry function on and off

- Press the light button while holding down the talk button of the residential station for which this function is set to switch the function on and off. When the function is on, the Call tone off LED on GH-1KD & GH-1AD and TALK LED on GH-1MD will flash at 2.5 second intervals in standby.

11-7

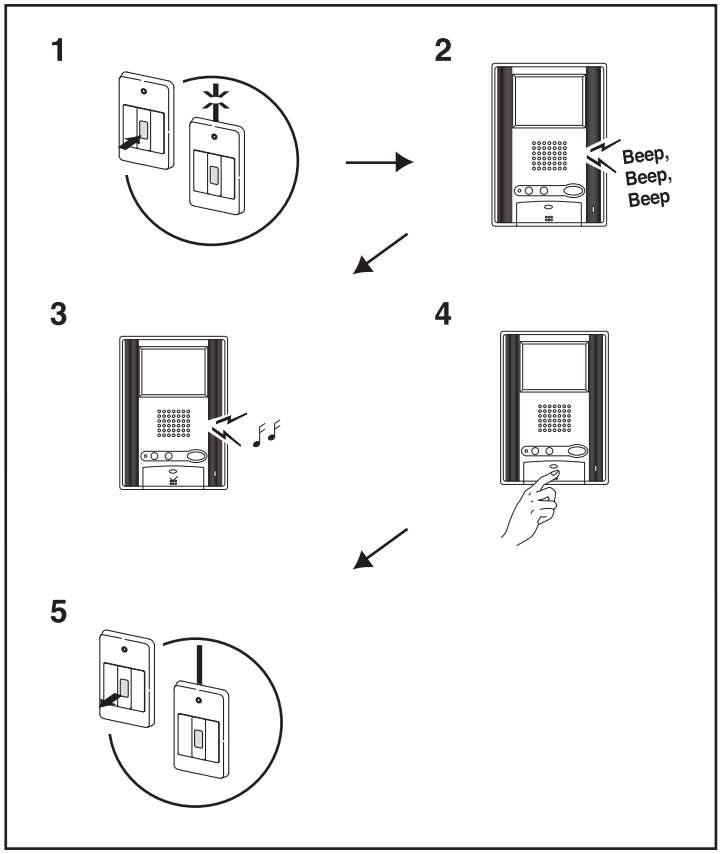

Emergency Alarm

1. Press and lock the emergency alarm switch (or when there is a line - off trouble).
2. An alarm will sound from the residential station.
3. When there is a call from the security guard station, the alarm will change to a standard call tone and sound for approximately 45 seconds.
4. Press the talk button to communicate with the security guard station. After talking, the emergency alarm will begin to sound again.
5. Release the lock position of the emergency alarm switch to return to standby position (restore the system to normal status).

NOTES:
1. On the residential station, the emergency alarm will be emitted at a loud volume, regardless of the volume setting.
2. The emergency alarm function can be activated even when the system is in use. (Alarms can be activated at the same time by up to 10 residences.)
3. Residential stations within the same residence will be unable to receive normal calls or doorbell calls while the emergency alarm is sounding. It is only possible to respond call from the security guard station.
4. During the emergency alarm, the entrance station cannot make calls to the residential station that set off the alarm or to the security guard station.

11-8

Monitoring Entrance Stations

With a monitor station, you can monitor entrance stations if you press the door release button in standby mode. You can switch between the entrance stations by pressing the door release button.

NOTES:
1. Entrance monitoring is possible for only one residential station at a time.
2. If you press the talk button while monitoring, you can communicate with that entrance station.
3. If a call is received while monitoring, monitoring is terminated.
4. Monitoring lasts for 30 seconds. If you press the door release button within the 30 seconds, the monitor screen will switch to the next entrance station and the 30 second monitoring timer will restart.
5. For information on setting up the monitor, see 4-1 [3].

11-9

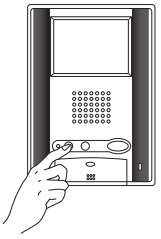

Service Button

Pressing the service button of the residential station (excluding GH-1MD) allows for operation of connected unit to be performed such as turning lights on and off.

12 OPERATIONS (SECURITY GUARD STATION)

12-1

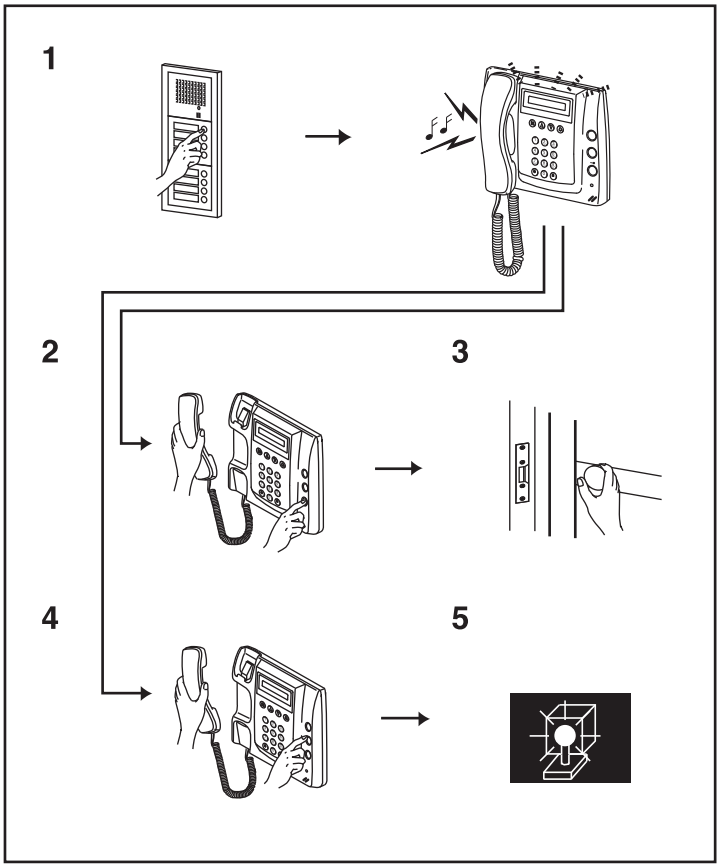

Replying to a Call from an Entrance Station

1. When a call is received from an entrance station, a call tone will sound for approximately 10 seconds at the security guard station and the entrance station number will be displayed. Lift the handset and respond. When you are done talking, replace the handset. Communication ends automatically after approximately 3 minutes.

⚠ With Expanded System, displaying Entrance station's unit ID# is different by COMMON lines' connection between Entrance stations and Security guard stations.
Connected to same common line: "programmed ID#" as is. (e.g. called from Entrance station #1: shown "MAIN ENTRANCE 01"), or
Connected to another common line: "programmed ID# plus 8" (e.g. called from Entrance station #1: shown "MAIN ENTRANCE 09")

2. Press the door release button while in communication.
3. The door release function will activate on the entrance station that is in communication.

* Depending on the electric door release system that you use, the door release may be active only while the door release button is pressed.

4. Press the light button once while in communication.
5. The outside light of the entrance will turn on for the preset duration of time (4-5), based on timer module used.

12-2

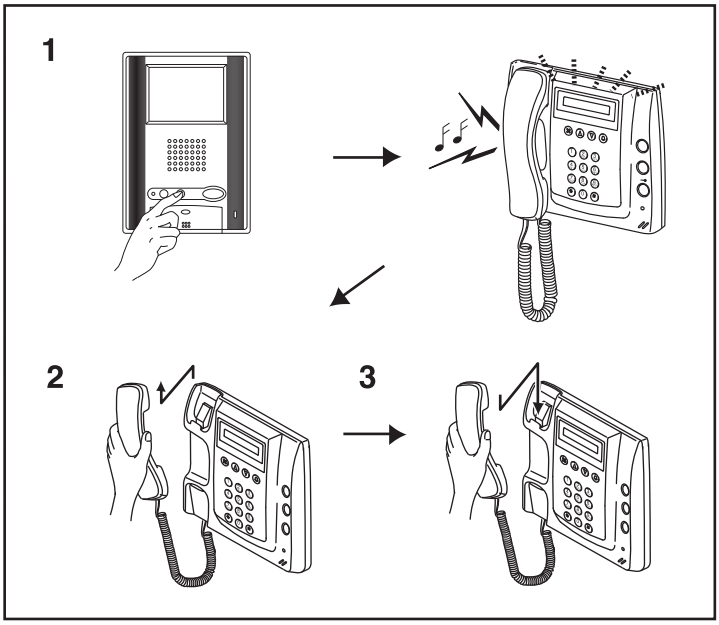

Replying to a Call from a Residential Station

1. When a call is received from a residential station, a call tone will sound for approximately 10 seconds at the security guard station and the room number and resident name will be displayed. Lift the handset and respond. If a call is not responded to, a record is kept.
2. Lift the handset to respond.
3. At the end, replace the handset.

* The communication will be ended automatically after approximately 1 minute when handsfree communication is used at the residential station, or after approximately 3 minutes when handset is used.

12-3

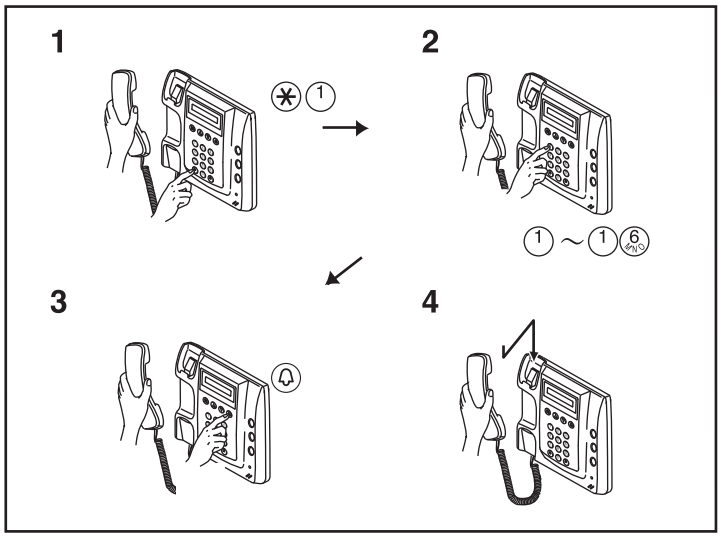

Calling an Entrance Station

1. Lift the handset and press the ∗ button and 1 button.
2. Use the 10 key to select the desired entrance station.
   ⚠With Expanded System, entering Entrance station's unit ID# is different by COMMON lines' connection between Entrance stations and Security guard stations.
   Connected to same common line: "programmed ID#" as is.
   (e.g. calling to Entrance station #1: Enter "1"), or
   Connected to another common line: "programmed ID# plus 8"
   (e.g. calling to Entrance station #1: 1+8=9, Enter "9")
3. Press the call button to communicate with the entrance station. If the corresponding entrance station does not exist, "DENIED" will be displayed. While in communication, you can use the light button and door release button.
4. When you are done talking, replace the handset. Communication ends automatically after approximately 3 minutes.

NOTE: ∗ Pressing only buttons is the same as entering letters when name scrolling and therefore "ENTER A LETTER" is displayed.

12-4

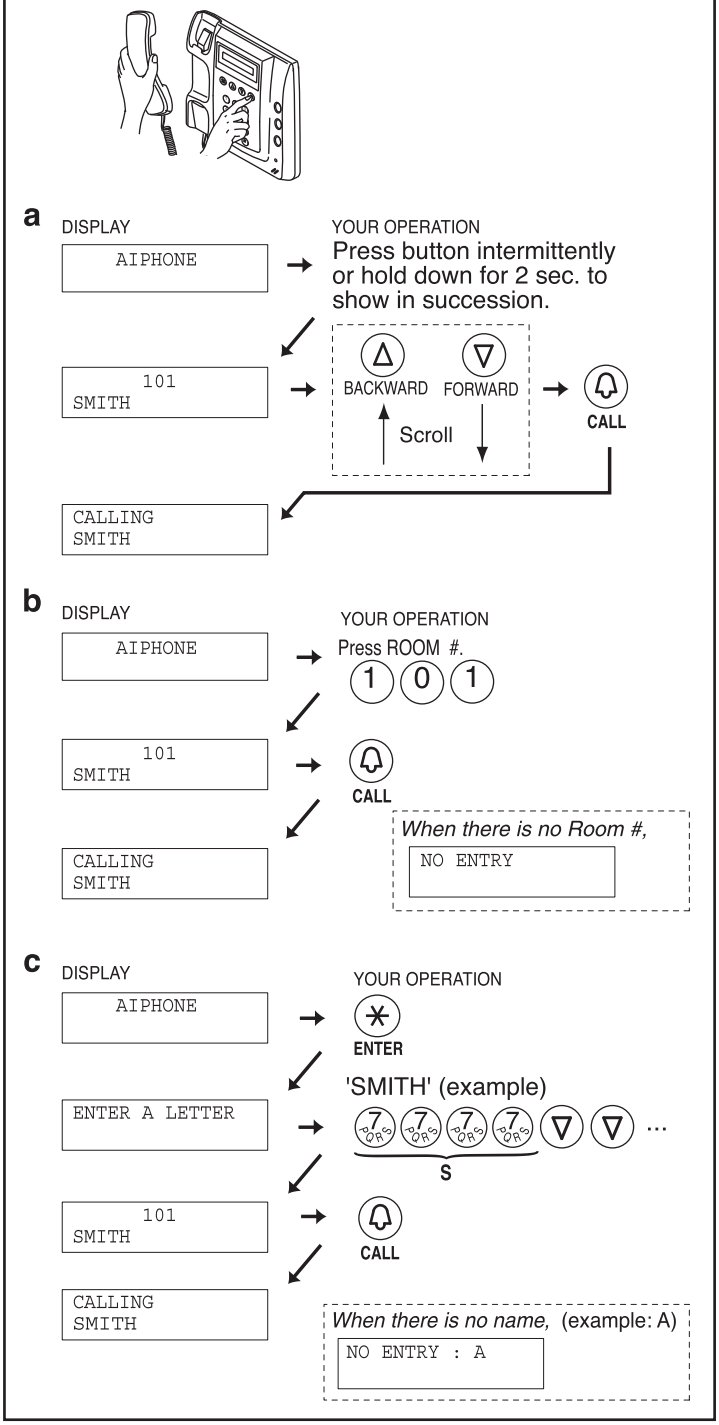

Calling a Residential Station

Lift the handset, display the name and press the call button.

a. Making a call by name scrolling
b. Making a call by entering the room number
c. Making a call by entering letters and selecting the corresponding name

NOTES: 1. Pressing the search button for approximately 2 seconds will automatically display the resident names every 0.4 seconds.
2. If both room number 111 and 1111 exist, the resident name for room 111 will be displayed when 1, 1, 1 is entered and the resident name for room 1111 will be displayed if 1 is entered one more time.

12-5

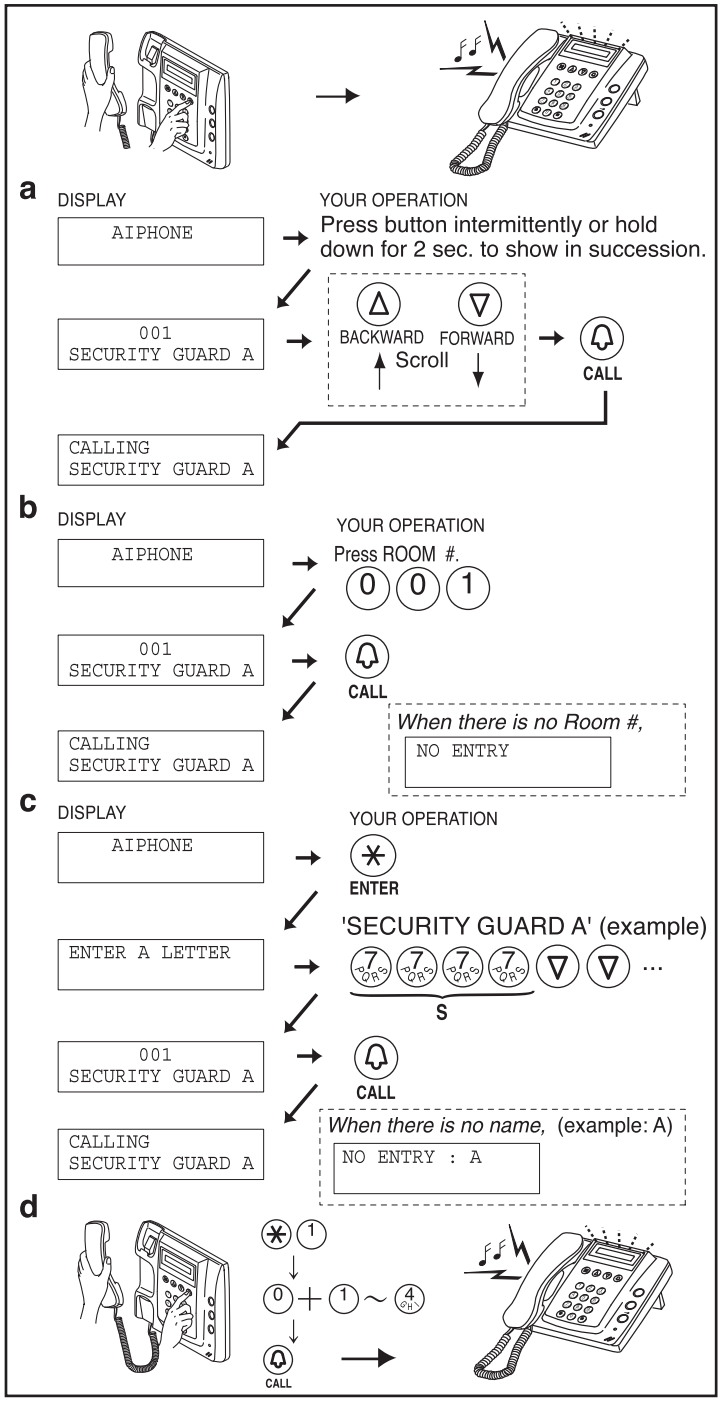

Calling Another Security Guard Station

Lift the handset, display the name and press the call button.

a. Making a call by name scrolling
b. Making a call by entering the room number
c. Making a call by entering letters and selecting the corresponding name

NOTES: 1. Pressing the search button for approximately 2 seconds will automatically display the resident names every 0.4 seconds.
2. If both room number 111 and 1111 exist, the resident name for room 111 will be displayed when 1, 1, 1 is entered and the resident name for room 1111 will be displayed if 1 is entered one more time.

d. Making a call by ID#

Lift the handset and press the "∗" button and "1" button. Press the "0" button, the security guard station ID (1 -4) button and then the call button. You will hear a low-volume call tone from the handset.

⚠With Expanded System, entering Security guard station's unit ID# is different by COMMON lines' connection.
Connected to same common line: "programmed ID#" as is. (e.g. calling to Security guard station #1: Enter "1"), or
Connected to another common line: "programmed ID# plus 2" (e.g. calling to Security guard station #1: 1+2=3, Enter "3")

NOTES: 1. Pressing only "∗" button is the same process as entering letters for name scrolling, therefore "ENTER A LETTER" is displayed.
2. If the security guard station does not exist, "DENIED" will be displayed.

12-6

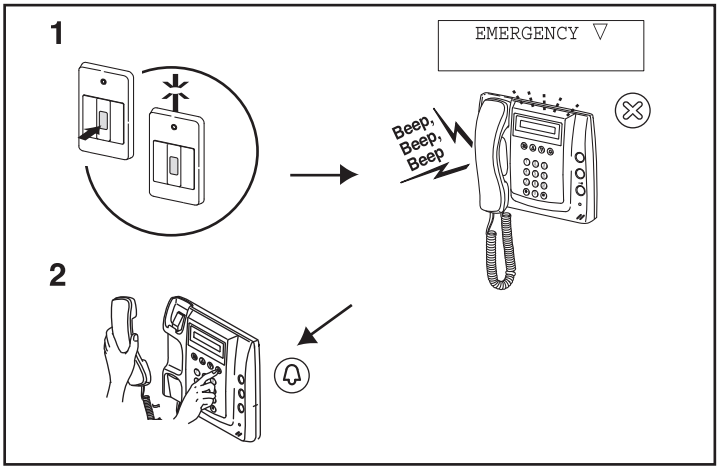

Emergency Call

1. When an emergency alarm switch is locked (or when a wire disconnection occurs), an alarm sounds at the security guard station and the word EMERGENCY is flashed with the relevant room number and resident name on the display. Press the cancel button to stop the alarm.
2. Lift the handset, check the name on the display and press the resident call button to communicate with the residential station.

NOTES: 1. If an emergency call is already active on a security guard station and that station is in communication, another security guard station cannot interrupt. (An in-use tone will be heard from the handset of the security guard station.)
2. The security guard station can respond to the emergency alarm from the residential station, or can make normal calls to other residential stations. (However, the name scrolling function will not work on the security guard station.) Operation is not possible while the system is in use.
3. The emergency alarm can be activated even when the system is in use. (Alarms can be activated at the same time by up to 10 residences.)
4. When a security guard station has received multiple emergency alarms,an arrow symbol will be shown to the right of EMERGENCY on the display.
5. When the arrow symbol is displayed, you can use the search button to select another residential station.
6. Emergency calls while the system is in use can be made after the other communication is terminated.

12-7

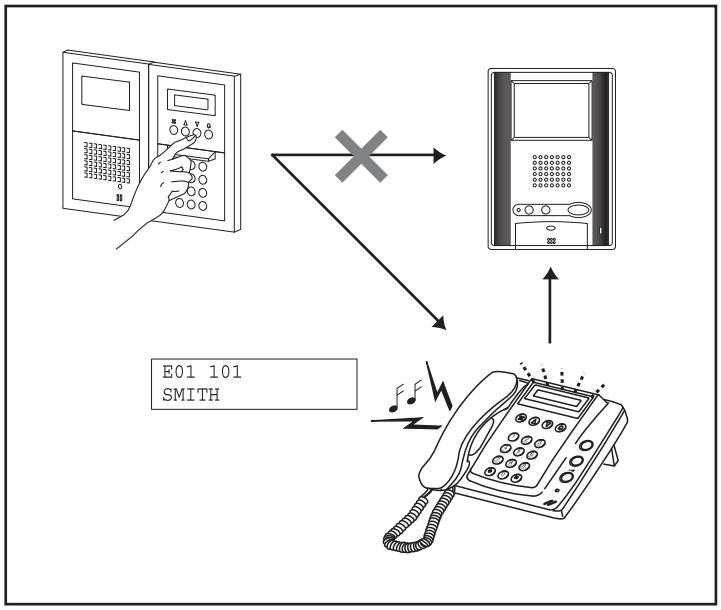

Reception mode Setting

While in standby mode, press "*", "1" and "*" on a security guard station to display "RECEPTION MODE". In this mode, you can intercept a call from an entrance to a tenant, and transfer the calls directly to the security guard station. Press "*", "1" and "*" again to cancel the setting.

NOTES:
1. If there are multiple security guard stations, you can make and cancel the transfer setting on any security guard station to switch the setting for the system overall.
2. Calls from an entrance station are transferred to all security guard stations that are linked to the corresponding residential station. The call tone sounds on all security guard stations at the same time.
3. A call to a residential station that is not linked to a security guard station will result in a call to the residential station directly.

Operation

1. In "RECEPTION MODE", all of the calls from entrance stations to residential stations are transferred to security guard stations. Tone rings and entrance number, called room number & name are displayed.
2. Lift the handset, and communicate with entrance station.
3. When transferring the call to called residential station, press CALL button.
4. After communication with residential station, hang up handset to establish the communication between caller entrance station and called residential station.

12-8

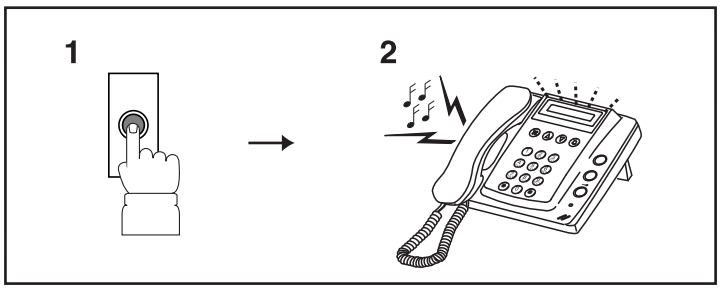

Calling from the Doorbell Button

1. The doorbell button is pushed. A call tone sounds as long as the button is held down.
2. A different call tone sounds (there is no communication available).

12-9

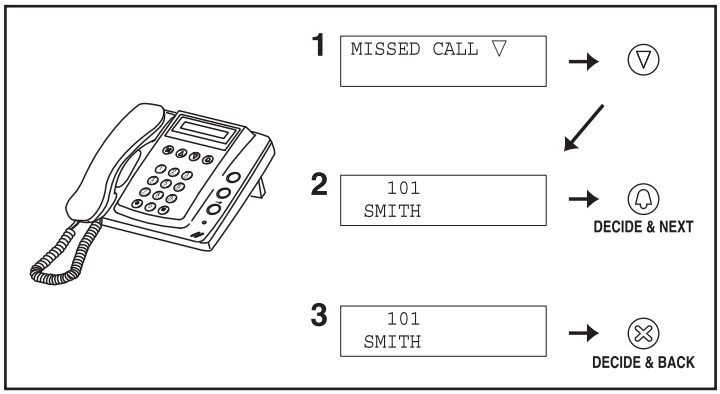

Missed call

1. If a security guard station fails to respond to a call from a residential station, "MISSED CALL" is displayed on the display. Press the search button to display the room number and name that made the call.
2. When the room number and name is displayed, lift the handset and press the call button to call the residential station or the security guard station that is displayed.
3. When the room number and name is displayed, press the cancel button to delete the displayed record. Other records will not be deleted.

NOTES:
1. The security guard station can hold up to 20 missed calls.
2. A record of answered calls is not kept.

13 TECHNICAL PRECAUTIONS

Technical precautions

- Operating temperature:
  - Entrance Station: -10 °C to 60 °C (14 °F to 140 °F)
  - Residential Station: 0 °C to 40 °C (32 °F to 104 °F)
  - Security Guard Station: 0 °C to 40 °C (32 °F to 104 °F)
  - Control Unit: 0 °C to 40 °C (32 °F to 104 °F)
- Mounting location: Do not install the entrance station in a place where there would be a bright light behind a visitor (or where there would be a bright background) or in a place where the camera lens would be directly exposed to sunlight or a bright light.
- Rain hood (option): Although the entrance station is weather resistant, it is recommended that it not be directly exposed to weather conditions. The rain hood (GF-H) can be installed to protect the entrance station from rainfall.
- Post-replacement setup: After all wiring is completed and the residential station has been replaced, turn off the power to GH-BC temporarily and then turn it back on. Next, reprogram the relevant residential station.
- Operation: When an entrance station is calling a residential station, the call tone from the doorbell button will not sound.
- Cleaning: Clean the units with a soft cloth dampened with a neutral household cleanser. Never use an abrasive cleanser or cloth.
- Repair requests: When units do not operate properly, request a qualified technician for repairs.

14 SPECIFICATIONS

Specifications

- Power supply:
  DC 24V supplied by PS-2410LC, PS-2410LD, PS-2410DIN (for each GH-BC, GH-VBC, GH-NS/10K, GH-MK, GH-BCX/A)
  GF-AC: 12-24VAC or 12-24VDC (separated power source)
- Current consumption:
  GH-BC: 0.9 A, GH-VBC: 0.9 A, GH-NS: 0.13 A,
  GH-MK: 0.18 A, GH-BCX/A: 0.45 A
  GF-AC: AC⋯ 0.1A, DC⋯ 0.07A
- Call tone:
  There are three different types of call tones:a call tone for the entrance station, a call tone for the security guard station and a call tone for the doorbell button.
- Communication path: Single path, non-open
- Communication:
  Voice-actuated communication (or press-to-talk communication)
- Door release:
  Connecting terminals: Between ELM-ELC (N/O) and ELB-ELC (N/C)
  Specifications: less than 4A (resistance load), AC/DC 24V, dry closure contact for door release
- Wiring: Two single-pair cable
- Type of cables:
  Pair cable (solid wire not stranded), polyethylene insulated, diameter 0.65 ~ 1.0 mm
- Dimensions:
  - GH-1MD: 160 (W) x 210 (H) x 55.5 (D) mm (6-5/16 x 8-1/4 x 2-3/16 inch)
  - GH-1AD: 125 (W) x 175 (H) x 32 (D) mm (4-15/16 x 6-7/8 x 1-1/4 inch)
  - GH-1KD: 125 (W) x 175 (H) x 32 (D) mm (4-15/16 x 6-7/8 x 1-1/4 inch)
  - GH-BC: 122.5 (W) x 108.5 (H) x 61 (D) mm (4-13/16 x 4-1/4 x 2-3/8 inch)
  - GH-VBC: 122.5 (W) x 108.5 (H) x 61 (D) mm (4-13/16 x 4-1/4 x 2-3/8 inch)
  - GH-4Z: 122.5 (W) x 108.5 (H) x 61 (D) mm (4-13/16 x 4-1/4 x 2-3/8 inch)
  - GH-MK: 215 (W) x 210 (H) x 69 (D) mm (8-7/16 x 8-1/4 x 2-3/4 inch)
  - GH-BCX/A: 210 (W) x 108.5 (H) x 61 (D) mm (8-1/4 x 4-1/4 x 2-3/8 inch)
  - GH-VBX: 210 (W) x 108.5 (H) x 61 (D) mm (8-1/4 x 4-1/4 x 2-3/8 inch)

  Entrance Station
  - 2 module, 2 row panel: 270 (W) x 225 (H) x 16 (D) mm (10-5/8 x 8-7/8 x 5/8 inch) (Box depth: 44mm (1-3/4"))
  - 3 module, 1 row panel: 135 (W) x 320 (H) x 16 (D) mm (5-5/16 x 12-5/8 x 5/8 inch) (Box depth: 44mm (1-3/4"))
- Weight:
  GH-1MD: Approx. 980 g (2.2 lbs.)
  GH-1AD: Approx. 330 g (0.7 lbs.)
  GH-1KD: Approx. 400 g (0.9 lbs.)
  GH-BC: Approx. 450 g (1.0 lbs.)
  GH-VBC: Approx. 250 g (0.6 lbs.)
  GH-4Z: Approx. 190 g (0.4 lbs.)
  GH-MK: Approx. 900 g (2.0 lbs.)
  GH-BCX/A: Approx. 380 g (0.8 lbs.)
  GH-VBX: Approx. 370 g (0.8 lbs.)

WARRANTY

Aiphone warrants its products to be free from defects of material and workmanship under normal use and service for a period of two years after delivery to the ultimate user and will repair free of charge or replace at no charge, should it become defective upon which examination shall disclose to be defective and under warranty. Aiphone reserves unto itself the sole right to make the final decision whether there is a defect in materials and/or workmanship; and whether or not the product is within the warranty. This warranty shall not apply to any Aiphone product which has been subject to misuse, neglect, accident, or to use in violation of instructions furnished, nor extended to units which have been repaired or altered outside of the factory. This warranty does not cover batteries or damage caused by batteries used in connection with the unit. This warranty covers bench repairs only,and any repairs must be made at the shop or place designated in writing by Aiphone. Aiphone will not be responsible for any costs incurred involving on site service calls. Aiphone will not provide compensation for any loss or damage incurred by the breakdown or malfunction of its products during use, or for any consequent inconvenience or losses that may result.

The object area of (WEEE) is EU.

This equipment has been tested and found to comply with the limits for a Class B digital device, pursuant to Part 15 of the FCC Rules. These limits are designed to provide reasonable protection against harmful interference in a residential installation. This equipment generates, uses, and can radiate radio frequency energy, and if not installed and used in accordance with the instructions, may cause harmful interference to radio communications. However, there is no guarantee that interference will not occur in a particular installation. If this equipment does cause harmful interference to radio or television reception, which can be determined by turning the equipment off and on, the user is encouraged to try to correct the interference by one or more of the following measures: • Reorient or relocate the receiving antenna • Connect the equipment into an outlet on a circuit different from that to which the receiver is connected. Increase the separation between the equipment and receiver. • Consult the dealer or an experienced radio/TV technician for help.

AIPHONE®

Providing Peace of Mind

http://www.aiphone.com/

AIPHONE CO., LTD., NAGOYA, JAPAN
AIPHONE CORPORATION, BELLEVUE, WA, USA
AIPHONE S.A.S., LISSES-EVRY, FRANCE